STEPPING MOTORS

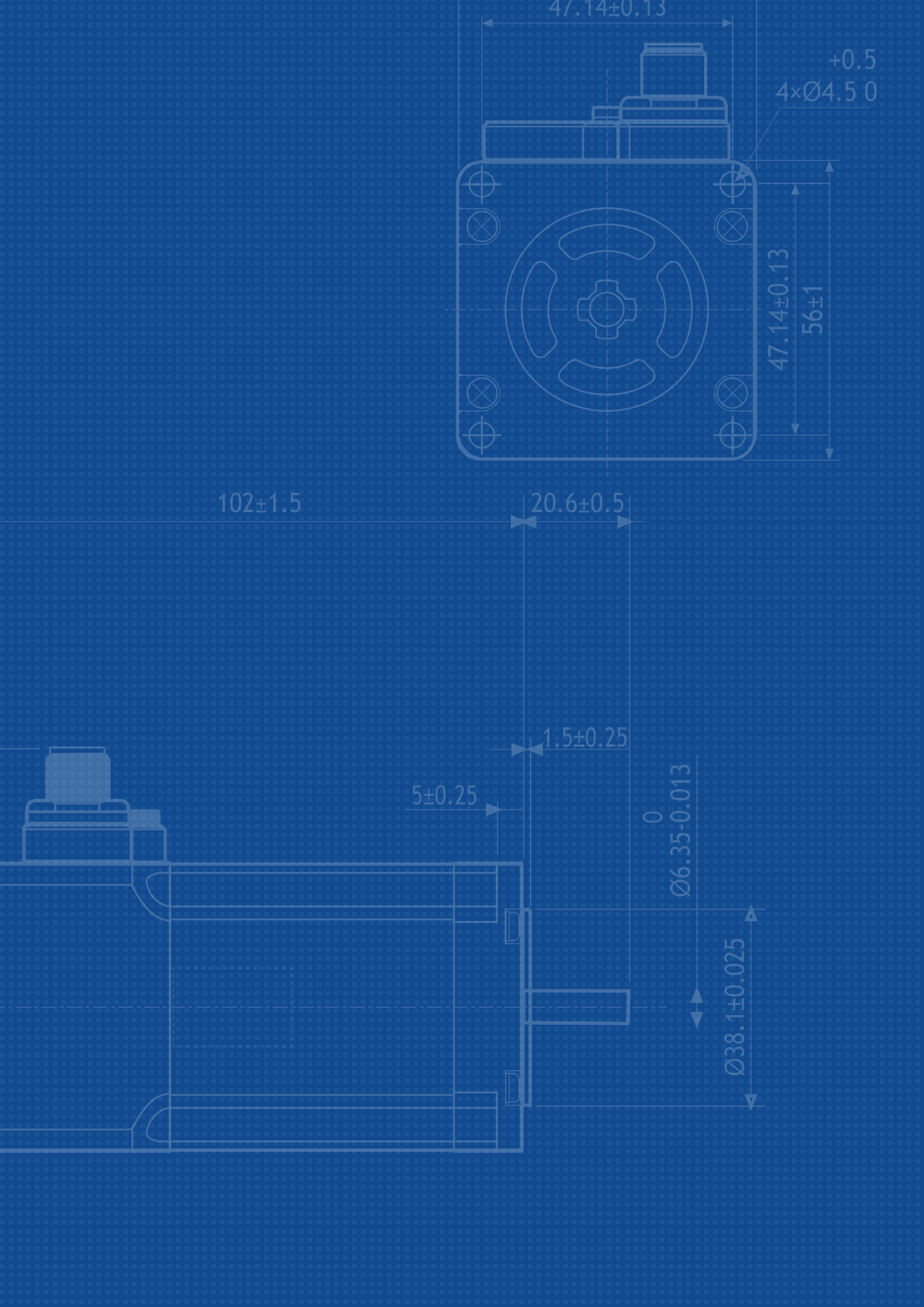
47.14±0.13
4×Ø4.5 +0.5 0
47.14±0.13
56±1
102±1.5
20.6±0.5
1.5±0.25
5±0.25
Ø6.35-0.013 0
Ø38.1±0.025

STEPPING MOTORS

INDEX

Key advantages of R.T.A. stepping motors

SANYO DENKI
SANMOTION
STEPPING SYSTEMS

Exclusive Partnership with **SANYO DENKI CO.** since 1989, one of the leading manufacturer of motion solution in the world.

- More than 30 years of experience, collaboration and evolution.
- High quality and reliability made in Japan, through automatized and robotized assembly line.

2 Families, Industrial stepping motors and Traditional stepping motors 5 Series with more than 100 models

IP 54 | FULL IP65 | PROTECTION DEGREE IP65 | M12 CONNECTOR | MOTORS WITH ENCODER | c UL us

1 INDUSTRIAL STEPPING MOTORS

- 25 models
- Flange size: 42 mm, 56 mm, 60 mm, 86 mm
- Holding torque: from 29 Ncm to 900 Ncm
- M12 and JST built-in connectors
- Protection degree: IP 54, IP 65, FULL IP 65
- Encoder versions available

2 INDUSTRIAL STEPPING MOTORS WITH ENCODER

- 24 models
- Embedded encoder in a terminal box
- Encoder resolutions: 400 cpr, 4000 cpr, INDEX
- Standard signal: differential (single-ended version available)

Table of contents

INDUSTRIAL STEPPING MOTORS

NOTE: Codes between brackets refer to double-shaft models.

INDUSTRIAL STEPPING MOTORS WITH ENCODER

3 TRADITIONAL STEPPING MOTORS

- 66 models
- Flange size: 14 mm, 28 mm, 42 mm, 56 mm 60 mm, 86 mm, 106,4 mm
- Holding torque: from 0,65 Ncm to 2.460 Ncm
- Encoder and brake versions available

MOTORS WITH ENCODER

BRAKE

4 TRADITIONAL STEPPING MOTORS WITH ENCODER

- 32 models
- Encoder assembled and tested by RTA
- Encoder resolutions: 400 cpr, 4000 cpr, INDEX
- Standard signal: differential (single ended version available)

5 TRADITIONAL STEPPING MOTORS WITH BRAKE

- 12 models
- Brakes static torque: from 24 Ncm to 350 Ncm

VERSION WITH BRAKE AND ENCODER AVAILABLE

6 ACCESSORIES - FRONT BRAKES

- 2 sizes: Nema 24 and Nema 34
- 24 VDC Power Supply
- M12 Connectors
- Holding Torque: 1.5 Nm (Nema 24) and 3.5 Nm (Nema 34)
- Cables: Standard or 90° (1 m or 3 m length)

Table of contents

TRADITIONAL STEPPING MOTORS

TRADITIONAL STEPPING MOTORS

	HOLDING TORQUE (Ncm)	FLANGE SIZE (mm)	LENGTH (mm)	BIPOLAR CURRENT* (A)	PAGE
50 mm FLANGE					
103-H6701-0140 (-0113)	38	50	39.8	0.7*	215
103-H6703-0440	68	50	51.3	1.4*	216
56 mm FLANGE					
103-H7121-0440	49	56	41.8	1.5*	217
103-H7123-5040 (-5010)	85	56	53.8	2.0	218
103-H7123-0140	110	56	53.8	0.7*	219
103-H7123-0440	110	56	53.8	1.5	220
103-H7123-0740 (-0710)	110	56	53.8	2.2*	221
103-H7123-1749 (-1711)	110	56	53.8	4.0	222
103-H7126-0140	165	56	75.8	0.75*	223
103-H7126-0740 (-0710)	165	56	75.8	2.2*	224
103-H7126-1740 (-1710)	165	56	75.8	4.0	225
103-H7126-6640 (-6610)	165	56	75.8	5.60	226
103-H7128-5740 (-5710)	200	56	94.8	2	227
60 mm FLANGE					
103-H7822-0740	137	60	54.9	4.0	228
103-H7822-1731	170	60	53.8	2.2*	229
103-H7823-0740	300	60	85.8	2.2*	230
103-H7823-1740 (-1714)	300	60	85.8	4.0	231
103-H7826-1642 (-1612)	380	60	103.8	6.0	232
85.5 mm FLANGE					
SM 2861-5055 (-5025)	360	86	66.0	2.0	233
SM 2861-5255 (-5225)	360	86	66.0	6.0	234
SM 2862-5055	700	86	96.5	2.0	235
SM 2862-5155 (-5125)	700	86	96.5	4.0	236
SM 2862-5255 (-5225)	700	86	96.5	6.0	237
SM 2863-5155 (-5126)	920	86	127.0	4.0	238
SM 2863-5255 (-5225)	920	86	127.0	6.0	239

TRADITIONAL STEPPING MOTORS

	HOLDING TORQUE (Ncm)	FLANGE SIZE (mm)	LENGTH (mm)	BIPOLAR CURRENT (A)	PAGE
106.4 mm FLANGE					
103-H89222-6341 (-6311)	1620	106.4	163.0	6.0	240
103-H89222-6541	1620	106.4	163.0	10.0	241
103-H89223-6341 (-6311)	2460	106.4	221.0	6.0	242
103-H89223-6641 (-6611)	2460	106.4	221.0	12.00	243

Not preferred models

PAGE 244

TRADITIONAL STEPPING MOTORS WITH ENCODER

	SANYO DENKI MOTOR CODE	HOLDING TORQUE (Ncm)	FLANGE SIZE (mm)	LENGTH (mm)	BIPOLAR CURRENT* (A)	PAGE
EM 0H1M-04D0	SH 2281-5231	7	28.0	32.0	0.7*	246
EM 0H2M-04D0	SH 2285-5231	14.5	28.0	51.5	0.7*	246
EM 1H2H-04D0	103-H5210-4512	51	42	48	2.0	247
EM 1H2H-04E0	103-H5210-4512	51	42	48	2.0	247
EM 1H2H-0HE0	103-H5210-4512	51	42	48	2.0	247
EM 1H3H-04D0	103-H212-4610	65	42	59.5	2.0	248
EM 1H3H-04E0	103-H212-4610	65	42	59.5	2.0	248
EM 1H3H-0HE0	103-H212-4610	65	42	59.5	2.0	248
EM 2H1M-04D0	103-H7123-1711	110	56	53.8	4.0	249
EM 2H1M-04E0	103-H7123-1711	110	56	53.8	4.0	249
EM 2H1M-0HE0	103-H7123-1711	110	56	53.8	4.0	249
EM 2H2M-04D0	103-H7126-1710	165	56	75.8	4.0	250
EM 2H2M-04E0	103-H7126-1710	165	56	75.8	4.0	250
EM 2H2M-0HE0	103-H7126-1710	165	56	75.8	4.0	250
EM 6H1M-04D0	103-H7822-1731	137	60	75.8	4.0	251
EM 6H1M-04E0	103-H7822-1731	137	60	75.8	4.0	251
EM 6H1M-0HE0	103-H7822-1731	137	60	75.8	4.0	251
EM 6H2M-04D0	103-H7823-1714	300	60	85.8	4.0	252
EM 6H2M-04E0	103-H7823-1714	300	60	85.8	4.0	252
EM 6H2M-0HE0	103-H7823-1714	300	60	85.8	4.0	252
EM 6H3H-04D0	103-H7826-1612	380	60	103.8	6	253
EM 6H3H-04E0	103-H7826-1612	380	60	103.8	6	253

TRADITIONAL STEPPING MOTORS WITH ENCODER

	SANYO DENKI MOTOR CODE	HOLDING TORQUE (Ncm)	FLANGE SIZE (mm)	LENGTH (mm)	BIPOLAR CURRENT* (A)	PAGE
EM 6H3H-0HE0	103-H7826-1612	380	60	103.8	6	253
EM 3F1L-04D0	SM 2861-5025	360	85.5	66.0	2.0	254
EM 3F1H-04D0	SM 2861-5225	360	85.5	66.0	6.0	255
EM 3F1H-04E0	SM 2861-5225	360	85.5	66.0	6.0	255
EM 3F1H-0HE0	SM 2861-5225	360	85.5	66.0	6.0	255
EM 3F2M-04D0	SM 2862-5125	700	85.5	96.5	4.0	256
EM 3F2H-04D0	SM 2862-5225	700	85.5	96.5	6.0	257
EM 3F2H-04E0	SM 2862-5225	700	85.5	96.5	6.0	257
EM 3F2H-0HE0	SM 2862-5225	700	85.5	96.5	6.0	257
EM 3F3H-04D0	SM 2863-5225	920	85.5	127.0	6.0	258
EM 3F3H-04E0	SM 2863-5225	920	85.5	127.0	6.0	258
EM 3F3H-0HE0	SM 2863-5225	920	85.5	127.0	6.0	258
EM 3F3M-14D0	SM 2863-5126	920	85.5	127.0	4.0	259

TRADITIONAL STEPPING MOTORS WITH BRAKE

	SANYO DENKI MOTOR CODE	HOLDING TORQUE (Ncm)	FLANGE SIZE (mm)	LENGTH (mm)	CURRENT (A)	PAGE
103-H5210-4512.B	103-H5210-4512	51	42	82	2.0	262
103-H7123-5010.B	103-H7123-5010	85	56	89.8	2.0	263
103-H7123-0710.B	103-H7123-0710	110	56	89.8	3.0	264
103-H7123-1711.B	103-H7123-1711	110	56	89.8	4.0	265
103-H7126-0710.B	103-H7126-0710	165	56	89.8	3.0	266
103-H7126-1710.B	103-H7126-1710	165	56	89.8	4.0	267
103-H7823-1714.B	103-H7823-1714	300	60	121.8	4.0	268
103-H7826-1612.B	103-H7826-1612	380	60	103.8	6.0	269
SM 2861-5025.B	SM 2861-5025	360	86	102	2.0	270
SM 2861-5225.B	SM 2861-5225	360	86	102	6.0	271
SM 2862-5125.B	SM 2862-5125	700	86	132.5	4.0	272
SM 2862-5225.B	SM 2862-5225	700	86	132.5	6.0	273

ACCESSORIES - FRONT BRAKES

	HOLDING TORQUE (Ncm)	FLANGE (mm)	CURRENT (mA)	VOLTAGE (V)	POWER (W)	PAGE
FB-M12-17-02-00000	0.2	42	170	24 VDC	4.1	282
FB-M12-23-08-00000	0.8	57	340	24 VDC	8.1	283
FB-M12-24-15-00000	1.5	60	460	24 VDC	11.0	284
FB-M12-34-35-00000	3.5	86	460	24 VDC	11.0	285

* Bipolar series connection

STEPPING MOTORS

INDUSTRIAL STEPPING MOTORS

RH 1S0M

Dimensions (Unit:mm)

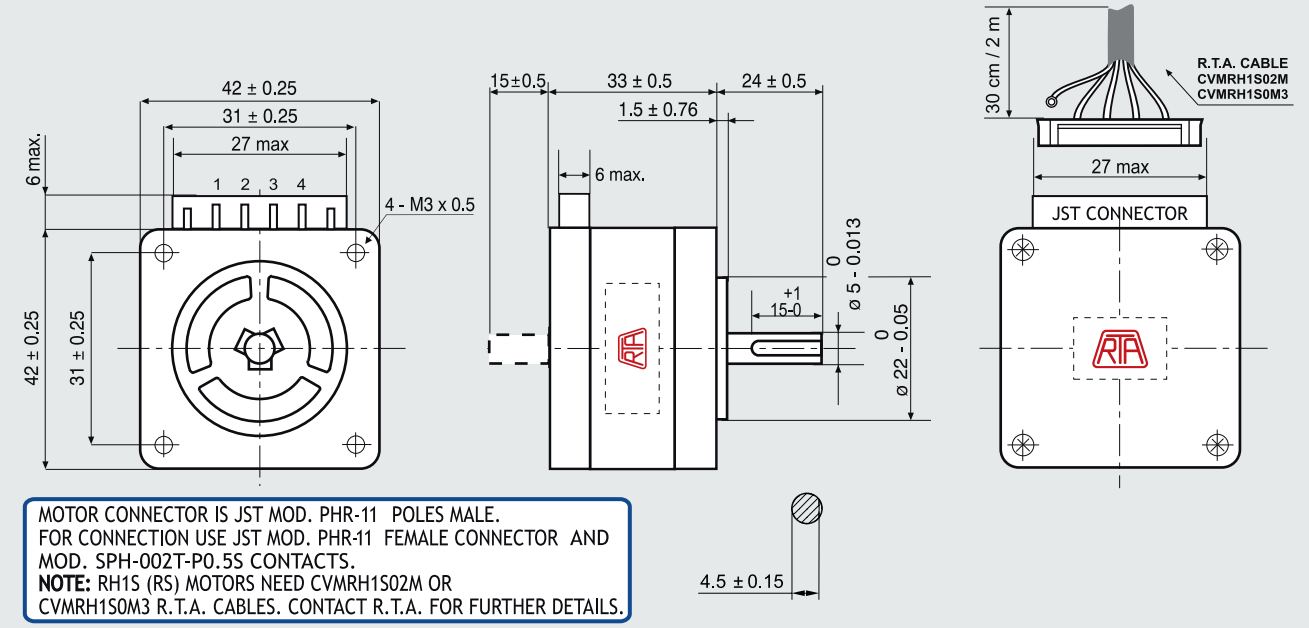

MOTOR CONNECTOR IS JST MOD. PHR-11 POLES MALE.
FOR CONNECTION USE JST MOD. PHR-11 FEMALE CONNECTOR AND MOD. SPH-002T-P0.5S CONTACTS.
NOTE: RH1S (RS) MOTORS NEED CVMRH1S02M OR CVMRH1S0M3 R.T.A. CABLES. CONTACT R.T.A. FOR FURTHER DETAILS.

FEATURES

MODEL		RH 1S0M (RH 1S0M-RS)
BASIC STEP ANGLE		1.8°
BIPOLAR CURRENT	(Amp)	1.0
UNIPOLAR CURRENT	(Amp)	
RESISTANCE	(Ohm)	3.6
INDUCTANCE	(mH)	7
BIPOLAR HOLDING TORQUE	(Ncm)	29
UNIPOLAR HOLDING TORQUE	(Ncm)	
ROTOR INERTIA	(Kgm ^{2} x 10 $^{-7}$)	31
THEORETICAL ACCELERATION	(rad x sec.$^{-2}$)	93500
BACK E.M.F.	(V/Krpm)	29
MASS	(Kg)	0.23
PROTECTION DEGREE		IP40
LEADS CODE		V

Codes between brackets refer to double shaft models.

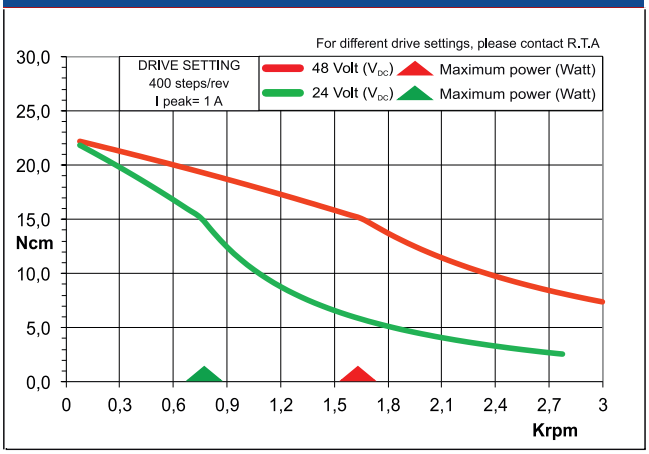

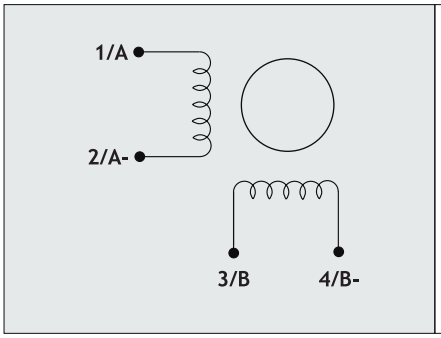

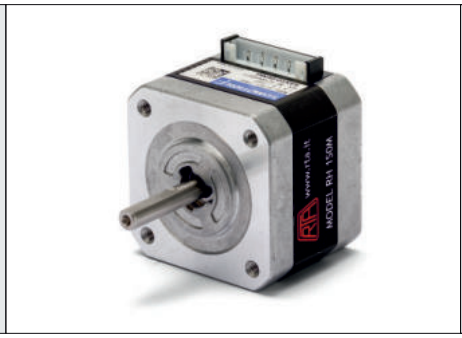

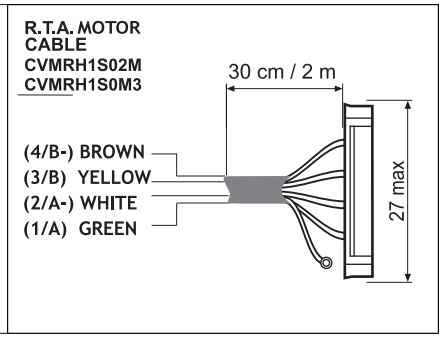

Suggested R.T.A. drive series: BSD, CSD, FLEX-DRIVE

RH 1S1M

Dimensions (Unit:mm)

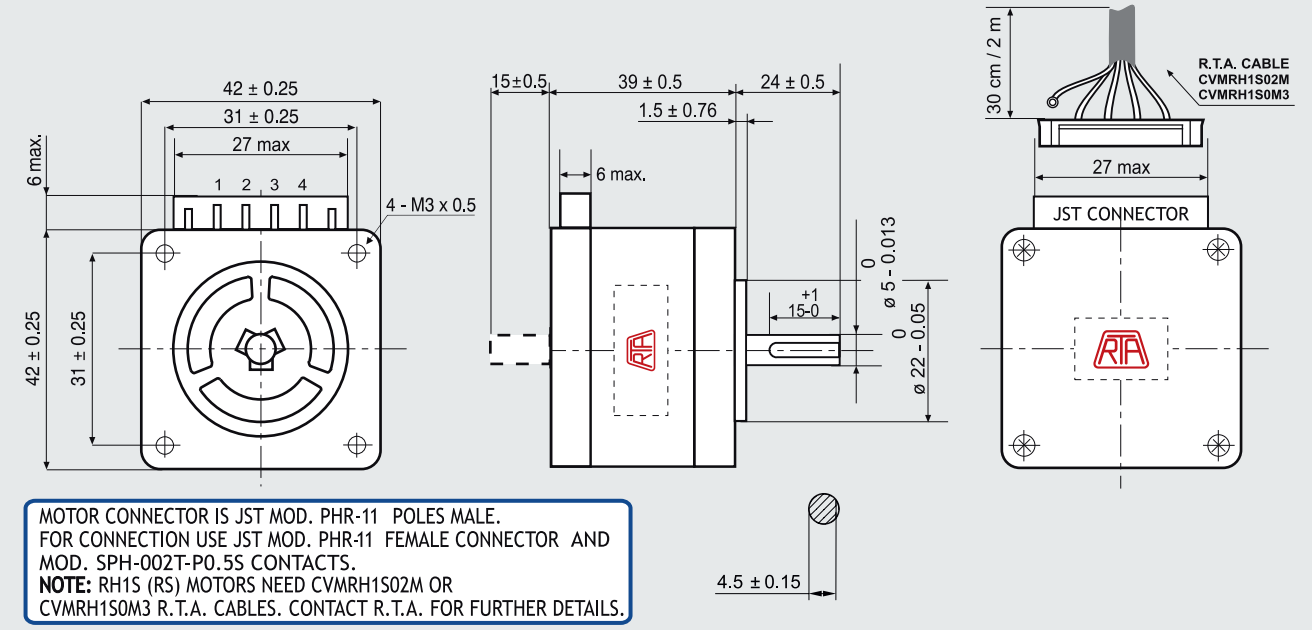

MOTOR CONNECTOR IS JST MOD. PHR-11 POLES MALE.
FOR CONNECTION USE JST MOD. PHR-11 FEMALE CONNECTOR AND MOD. SPH-002T-P0.5S CONTACTS.
NOTE: RH1S (RS) MOTORS NEED CVMRH1S02M OR CVMRH1S0M3 R.T.A. CABLES. CONTACT R.T.A. FOR FURTHER DETAILS.

FEATURES

MODEL		RH 1S1M (RH 1S1M-RS)
BASIC STEP ANGLE		1.8°
BIPOLAR CURRENT	(Amp)	1.0
UNIPOLAR CURRENT	(Amp)	
RESISTANCE	(Ohm)	4.6
INDUCTANCE	(mH)	9.6
BIPOLAR HOLDING TORQUE	(Ncm)	43
UNIPOLAR HOLDING TORQUE	(Ncm)	
ROTOR INERTIA	(Kgm ^{2} x 10 $^{-7}$)	46
THEORETICAL ACCELERATION	(rad x sec.$^{-2}$)	93500
BACK E.M.F.	(V/Krpm)	43
MASS	(Kg)	0.3
PROTECTION DEGREE		IP40
LEADS CODE		V

Codes between brackets refer to double shaft models.

TORQUE/SPEED CURVE

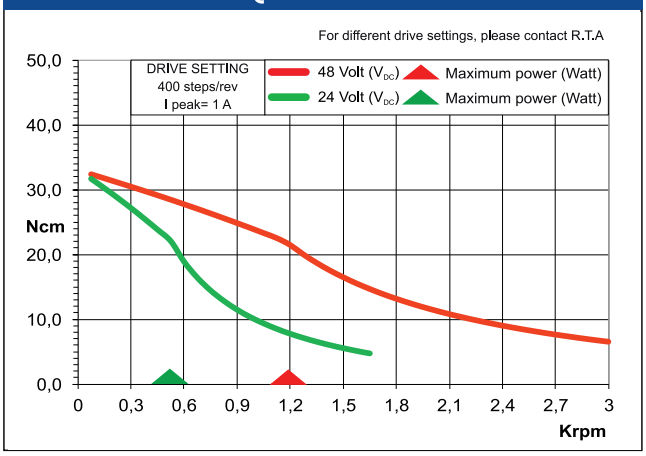

Suggested R.T.A. drive series: BSD, CSD, FLEX-DRIVE

RH 1S1H

Dimensions (Unit:mm)

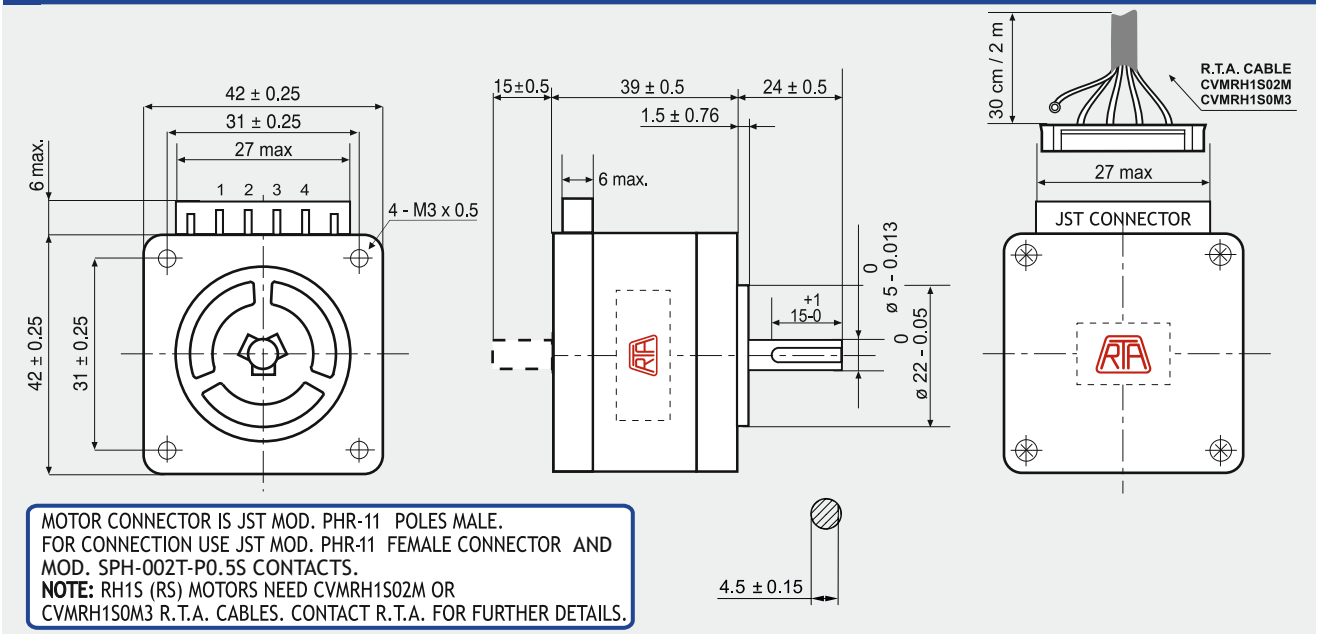

MOTOR CONNECTOR IS JST MOD. PHR-11 POLES MALE.
FOR CONNECTION USE JST MOD. PHR-11 FEMALE CONNECTOR AND MOD. SPH-002T-P0.5S CONTACTS.
NOTE: RH1S (RS) MOTORS NEED CVMRH1S02M OR CVMRH1S0M3 R.T.A. CABLES. CONTACT R.T.A. FOR FURTHER DETAILS.

FEATURES

MODEL		RH 1S1H (RH 1S1H-RS)
BASIC STEP ANGLE		1.8 ± 0.09°
BIPOLAR CURRENT	(Amp)	2.0
UNIPOLAR CURRENT	(Amp)	
RESISTANCE	(Ohm)	1.1
INDUCTANCE	(mH)	2.4
BIPOLAR HOLDING TORQUE	(Ncm)	43
UNIPOLAR HOLDING TORQUE	(Ncm)	
ROTOR INERTIA	(Kgm ^{2} x 10 $^{-7}$)	46
THEORETICAL ACCELERATION	(rad x sec.$^{-2}$)	93000
BACK E.M.F.	(V/Krpm)	21.5
MASS	(Kg)	0.3
PROTECTION DEGREE		IP40
LEADS CODE		V

Codes between brackets refer to double shaft models.

TORQUE/SPEED CURVE

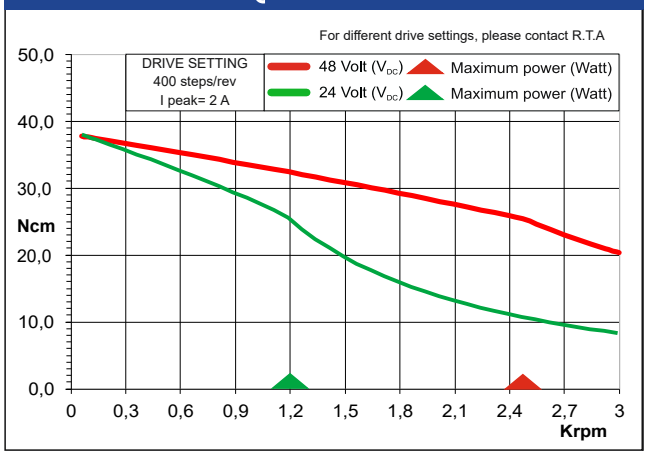

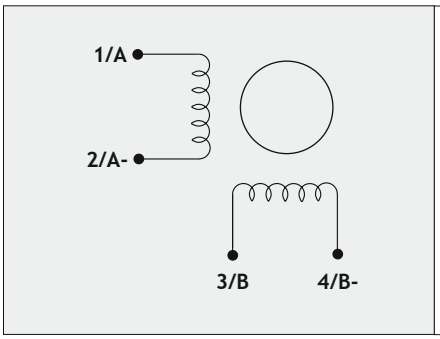

R.T.A. MOTOR CABLE CVMRH1S02M CVMRH1S0M3

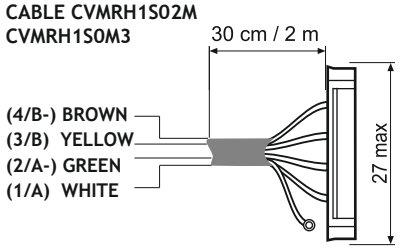

Suggested R.T.A. drive series: BSD, CSD, FLEX-DRIVE

RH 1S2M

Dimensions (Unit:mm)

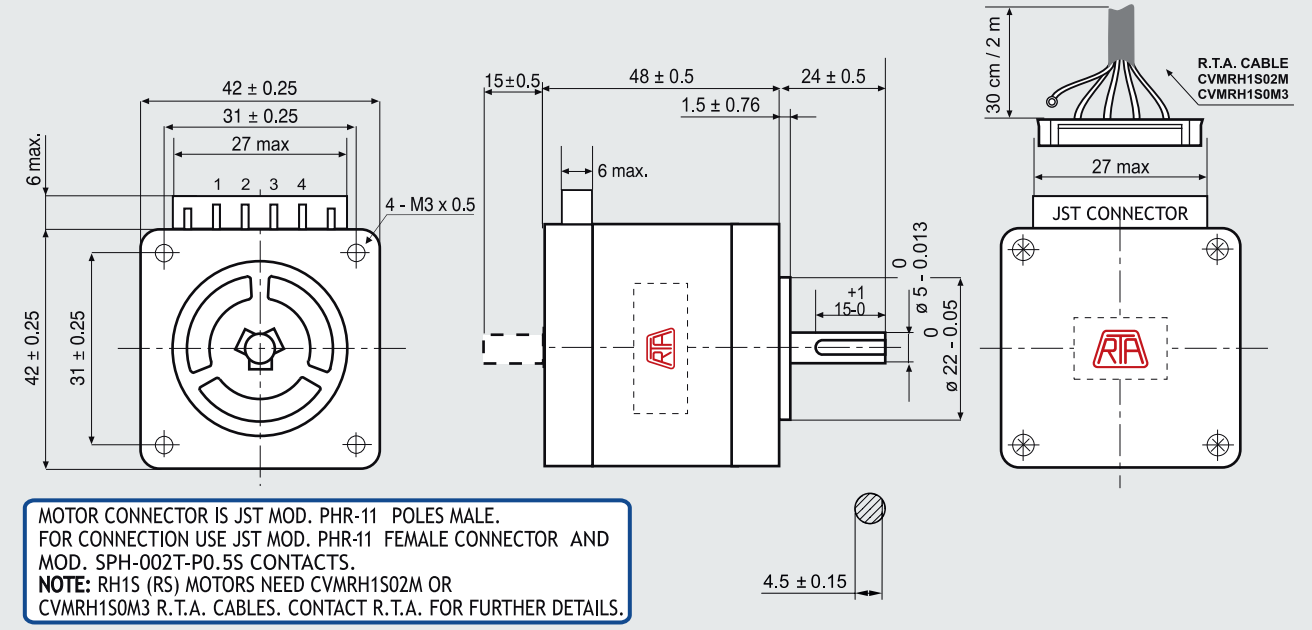

MOTOR CONNECTOR IS JST MOD. PHR-11 POLES MALE.
FOR CONNECTION USE JST MOD. PHR-11 FEMALE CONNECTOR AND MOD. SPH-002T-P0.5S CONTACTS.
NOTE: RH1S (RS) MOTORS NEED CVMRH1S02M OR CVMRH1S0M3 R.T.A. CABLES. CONTACT R.T.A. FOR FURTHER DETAILS.

FEATURES

MODEL		RH 1S2M (RH 1S2M-RS)
BASIC STEP ANGLE		1.8°
BIPOLAR CURRENT	(Amp)	1.0
UNIPOLAR CURRENT	(Amp)	
RESISTANCE	(Ohm)	5.3
INDUCTANCE	(mH)	12.5
BIPOLAR HOLDING TORQUE	(Ncm)	56
UNIPOLAR HOLDING TORQUE	(Ncm)	
ROTOR INERTIA	(Kgm ^{2} x 10 $^{-7}$)	63
THEORETICAL ACCELERATION	(rad x sec.$^{-2}$)	88900
BACK E.M.F.	(V/Krpm)	56
MASS	(Kg)	0.38
PROTECTION DEGREE		IP40
LEADS CODE		V

Codes between brackets refer to double shaft models.

TORQUE/SPEED CURVE

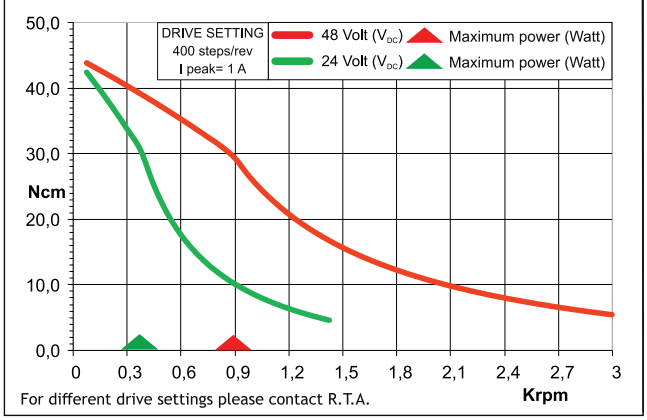

For different drive settings please contact R.T.A.

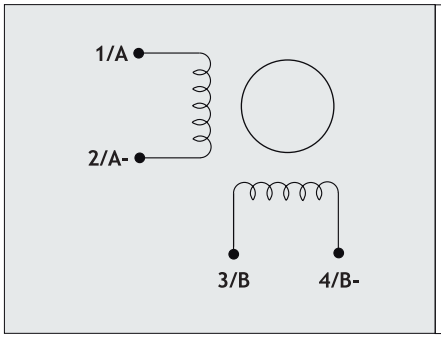

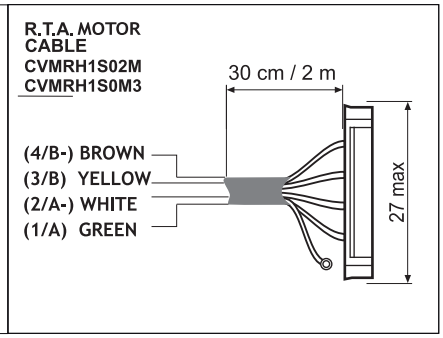

Suggested R.T.A. drive series: BSD, CSD, FLEX-DRIVE

RH 1S2H

Dimensions (Unit:mm)

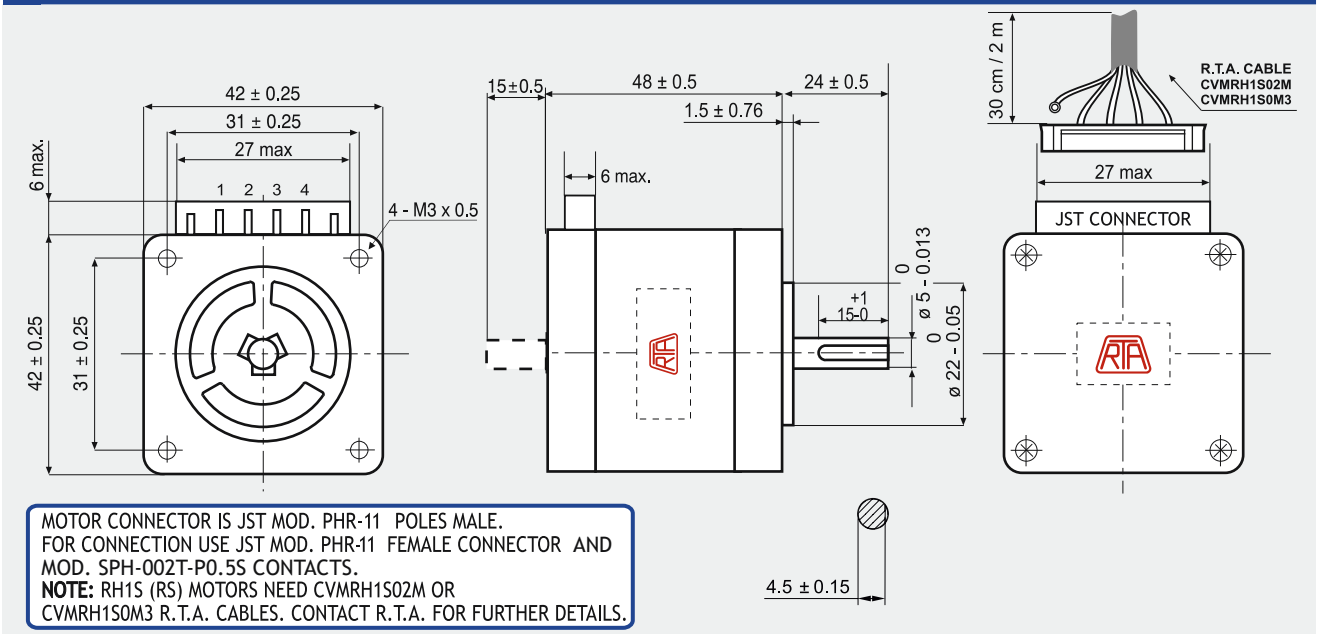

MOTOR CONNECTOR IS JST MOD. PHR-11 POLES MALE.
FOR CONNECTION USE JST MOD. PHR-11 FEMALE CONNECTOR AND MOD. SPH-002T-P0.5S CONTACTS.
NOTE: RH1S (RS) MOTORS NEED CVMRH1S02M OR CVMRH1S0M3 R.T.A. CABLES. CONTACT R.T.A. FOR FURTHER DETAILS.

FEATURES

MODEL		RH 1S2H (RH 1S2H-RS)
BASIC STEP ANGLE		1.8 ± 0.09°
BIPOLAR CURRENT	(Amp)	2.3
UNIPOLAR CURRENT	(Amp)	
RESISTANCE	(Ohm)	0.93
INDUCTANCE	(mH)	2.2
BIPOLAR HOLDING TORQUE	(Ncm)	56
UNIPOLAR HOLDING TORQUE	(Ncm)	
ROTOR INERTIA	(Kgm ^{2} x 10 $^{-7}$)	63
THEORETICAL ACCELERATION	(rad x sec.$^{-2}$)	89000
BACK E.M.F.	(V/Krpm)	24.3
MASS	(Kg)	0.38
PROTECTION DEGREE		IP40
LEADS CODE		V

Codes between brackets refer to double shaft models.

TORQUE/SPEED CURVE

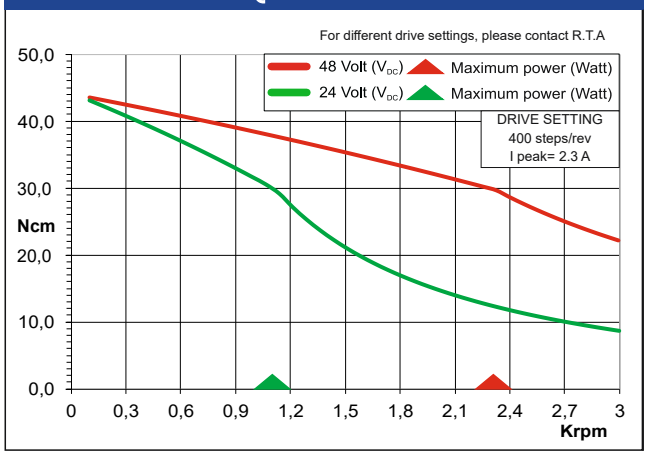

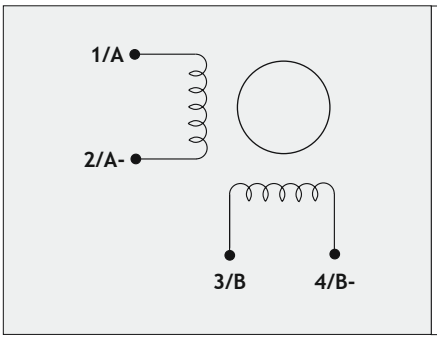

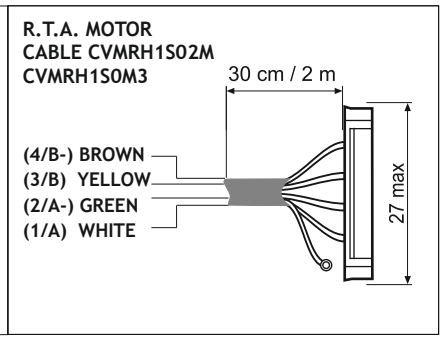

Suggested R.T.A. drive series: BSD, CSD, FLEX-DRIVE

RH 1S3M

Dimensions (Unit:mm)

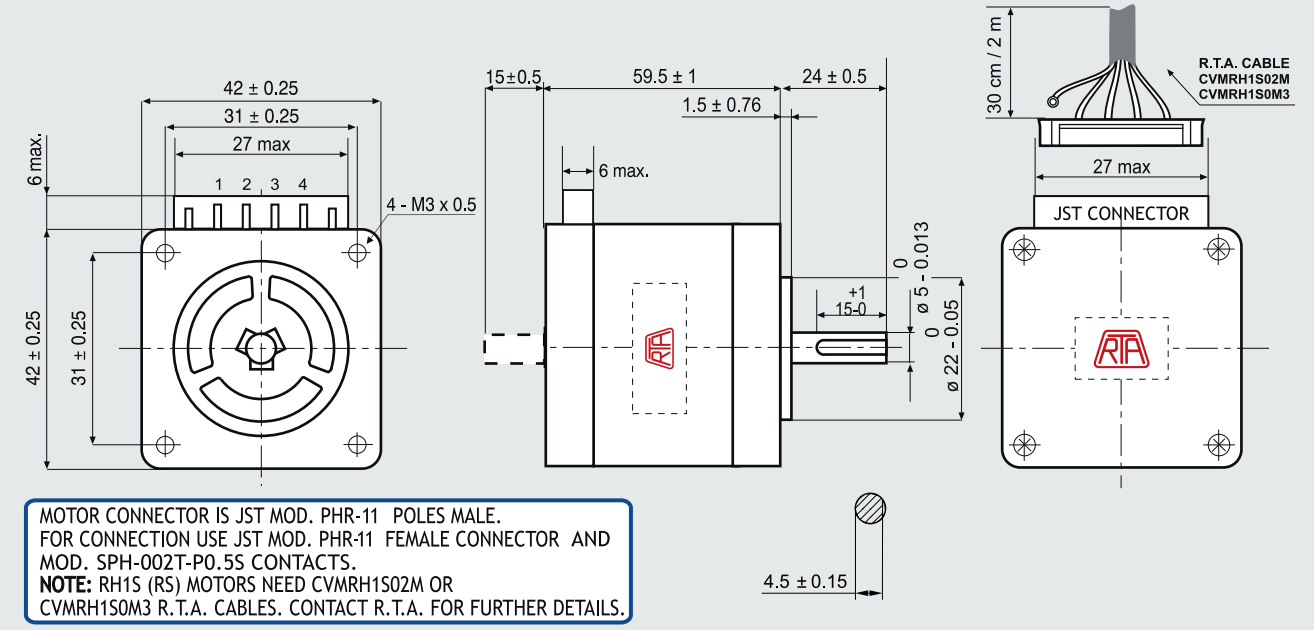

MOTOR CONNECTOR IS JST MOD. PHR-11 POLES MALE.
FOR CONNECTION USE JST MOD. PHR-11 FEMALE CONNECTOR AND MOD. SPH-002T-P0.5S CONTACTS.
NOTE: RH1S (RS) MOTORS NEED CVMRH1S02M OR CVMRH1S0M3 R.T.A. CABLES. CONTACT R.T.A. FOR FURTHER DETAILS.

FEATURES

MODEL		RH 1S3M (RH 1S3M-RS)
BASIC STEP ANGLE		1.8°
BIPOLAR CURRENT	(Amp)	1.0
UNIPOLAR CURRENT	(Amp)	
RESISTANCE	(Ohm)	6.5
INDUCTANCE	(mH)	16
BIPOLAR HOLDING TORQUE	(Ncm)	80
UNIPOLAR HOLDING TORQUE	(Ncm)	
ROTOR INERTIA	(Kgm ^{2} x 10 $^{-7}$)	94
THEORETICAL ACCELERATION	(rad x sec.$^{-2}$)	85100
BACK E.M.F.	(V/Krpm)	80
MASS	(Kg)	0.51
PROTECTION DEGREE		IP40
LEADS CODE		V

Codes between brackets refer to double shaft models.

TORQUE/SPEED CURVE

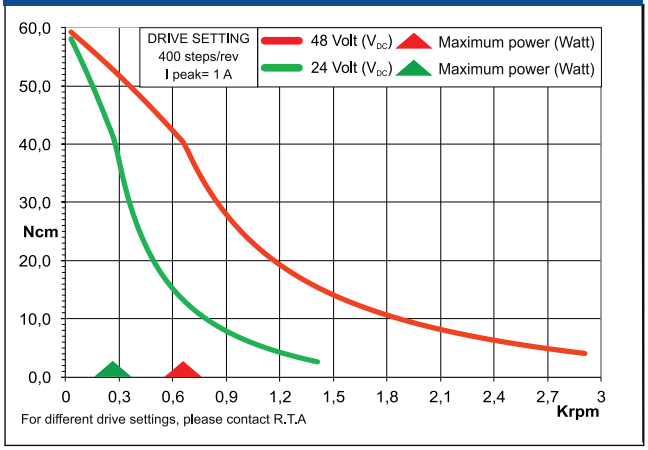

For different drive settings, please contact R.T.A

Suggested R.T.A. drive series: BSD, CSD, FLEX-DRIVE

RH 1S3H

Dimensions (Unit:mm)

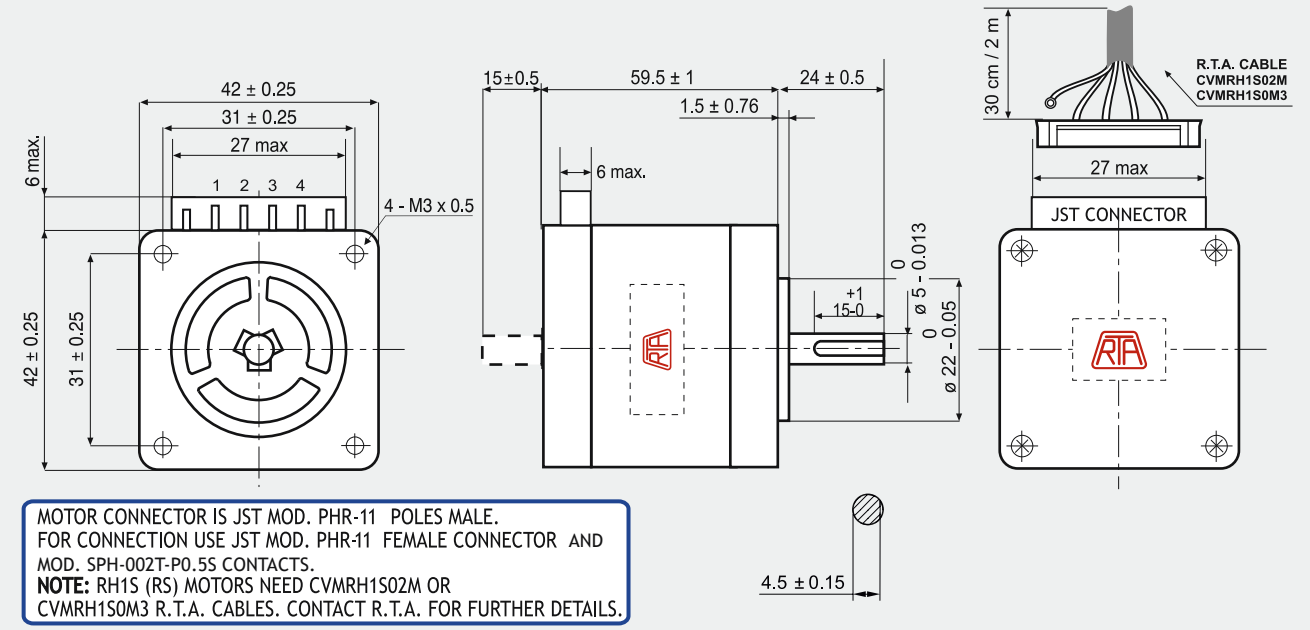

FEATURES

MODEL		RH 1S3H (RH 1S3H-RS)
BASIC STEP ANGLE		1.8 ± 0.09°
BIPOLAR CURRENT	(Amp)	2.3
UNIPOLAR CURRENT	(Amp)	
RESISTANCE	(Ohm)	1.2
INDUCTANCE	(mH)	3.0
BIPOLAR HOLDING TORQUE	(Ncm)	80
UNIPOLAR HOLDING TORQUE	(Ncm)	
ROTOR INERTIA	(Kgm ^{2} x 10 $^{-7}$)	94
THEORETICAL ACCELERATION	(rad x sec.$^{-2}$)	85100
BACK E.M.F.	(V/Krpm)	34.7
MASS	(Kg)	0.51
PROTECTION DEGREE		IP40
LEADS CODE		V

Codes between brackets refer to double shaft models.

TORQUE/SPEED CURVE

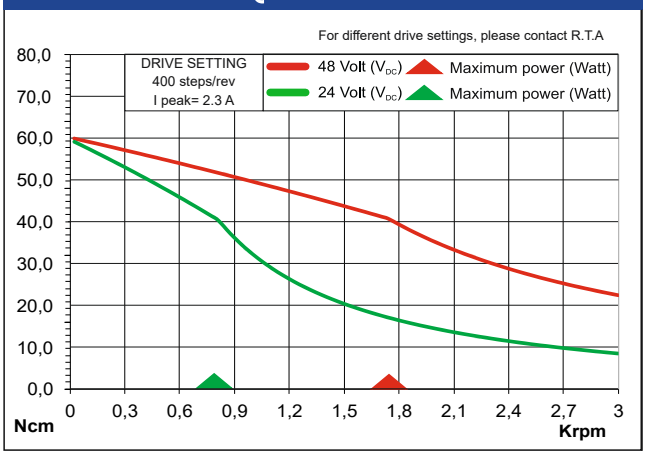

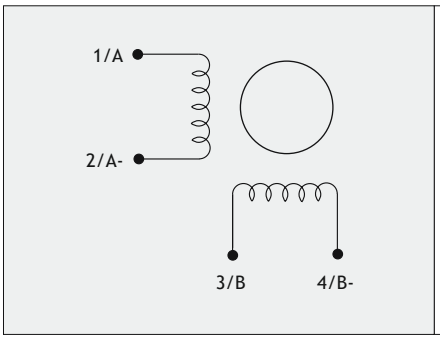

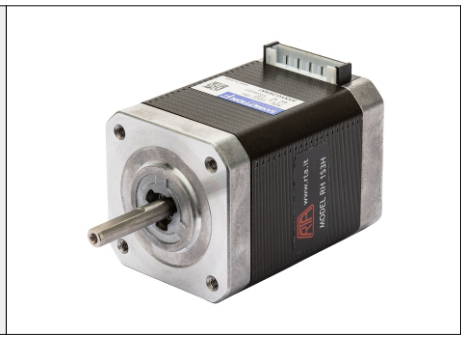

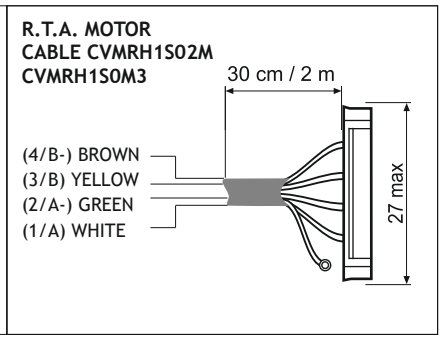

Suggested R.T.A. drive series: BSD, CSD, FLEX-DRIVE

RH 2S1M

Dimensions (Unit:mm)

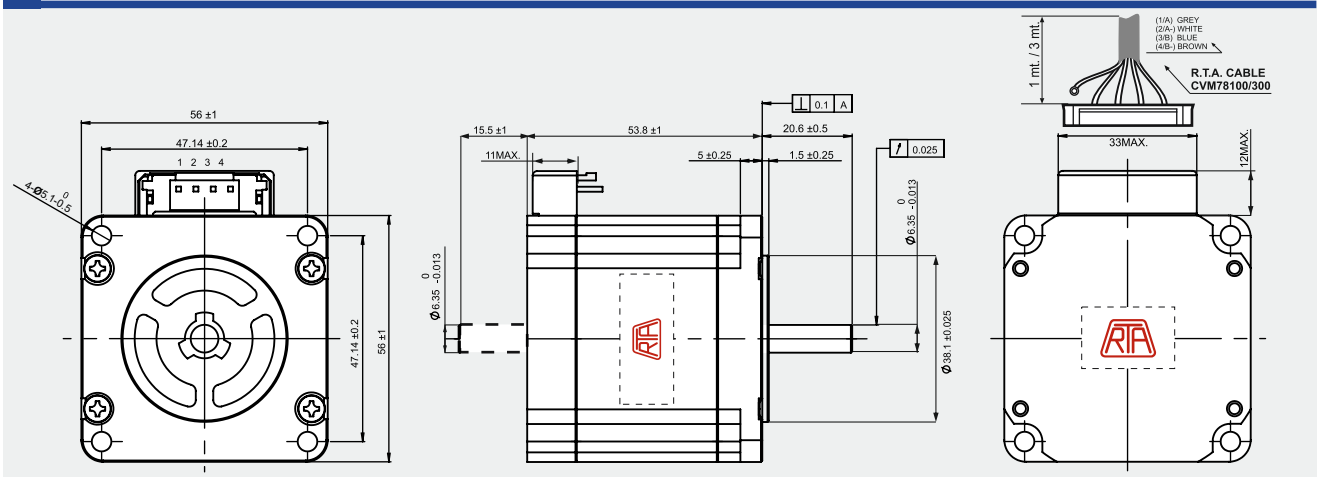

MOTOR CONNECTOR IS JST mod. B4P-VH 4 POLES MALE.
FOR CONNECTION USE JST mod. VHR-4N FEMALE CONNECTOR AND mod. SVH-21 T-P1.1 CONTACTS.
NOTE: RH2S (RS) MOTORS NEED CVM78100 AND CVM78300 R.T.A. CABLES. CONTACT R.T.A. FOR FURTHER DETAILS.

+ 30%
HOLDING TORQUE

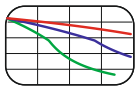

THAN THE PREVIOUS «H» SERIES

FEATURES

MODEL		RH 2S1M (RH 2S1M-RS)
BASIC STEP ANGLE		1.8 ± 0.09°
BIPOLAR CURRENT	(Amp)	4.0
UNIPOLAR CURRENT	(Amp)	
RESISTANCE	(Ohm)	0.37
INDUCTANCE	(mH)	1.5
BIPOLAR HOLDING TORQUE	(Ncm)	140
ROTOR INERTIA	(Kgm ^{2} x 10 $^{-7}$)	280
THEORETICAL ACCELERATION	(rad x sec.$^{-2}$)	50000
BACK E.M.F.	(V/Krpm)	35
MASS	(Kg)	0.69
INTERNATIONAL STANDARDS		UL, CSA
PROTECTION DEGREE		IP40
LEADS CODE		V

Codes between brackets refer to double shaft models.

TORQUE/SPEED CURVE

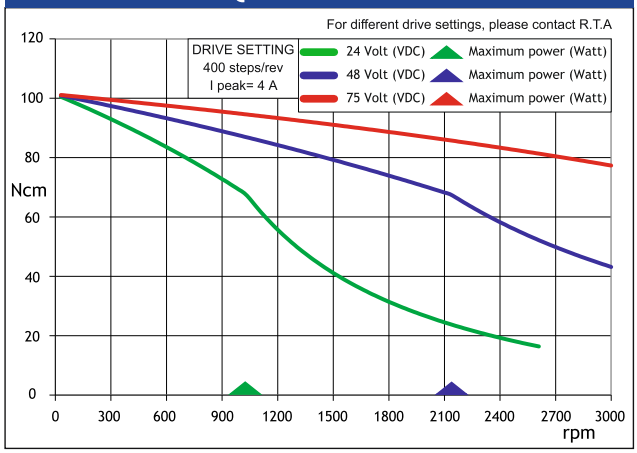

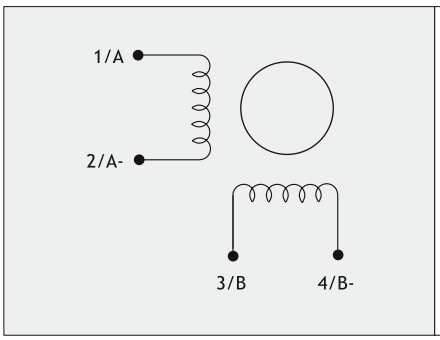

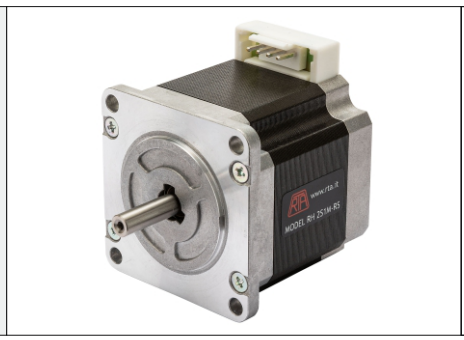

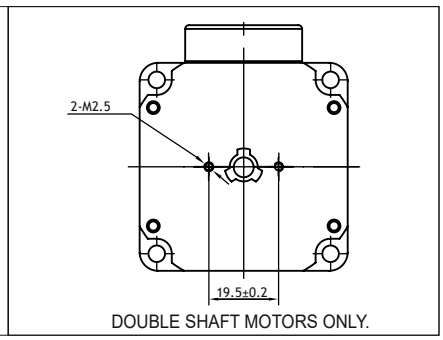

DOUBLE SHAFT MOTORS ONLY.

Suggested R.T.A. drive series: BSD, CSD, FLEX-DRIVE, NDC

RH 2S2M

Dimensions (Unit:mm)

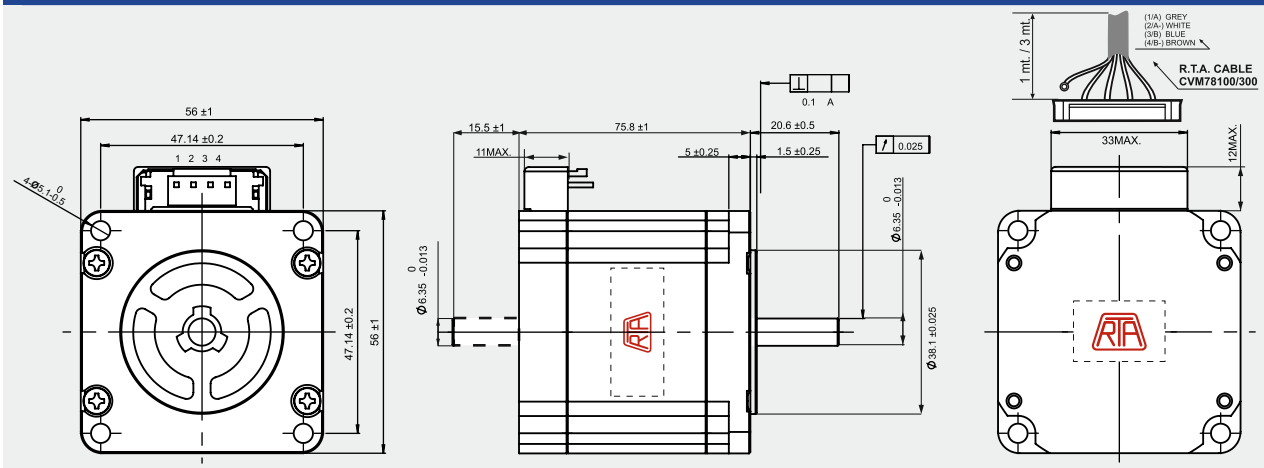

MOTOR CONNECTOR IS JST mod. B4P-VH 4 POLES MALE.
FOR CONNECTION USE JST mod. VHR-4N FEMALE CONNECTOR AND mod. SVH-21 T-P1.1 CONTACTS.
NOTE: RH2S (RS) MOTORS NEED CVM78100 AND CVM78300 R.T.A. CABLES. CONTACT R.T.A. FOR FURTHER DETAILS.

+ 40%
HOLDING TORQUE

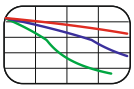

THAN THE PREVIOUS «H» SERIES

FEATURES

MODEL		RH 2S2M (RH 2S2M-RS)
BASIC STEP ANGLE		1.8 ± 0.09°
BIPOLAR CURRENT	(Amp)	4.0
UNIPOLAR CURRENT	(Amp)	
RESISTANCE	(Ohm)	0.52
INDUCTANCE	(mH)	2.4
BIPOLAR HOLDING TORQUE	(Ncm)	235
ROTOR INERTIA	(Kgm ^{2} x 10 $^{-7}$)	500
THEORETICAL ACCELERATION	(rad x sec.$^{-2}$)	47000
BACK E.M.F.	(V/Krpm)	58.7
MASS	(Kg)	1.1
INTERNATIONAL STANDARDS		UL, CSA
PROTECTION DEGREE		IP40
LEADS CODE		V

Codes between brackets refer to double shaft models.

TORQUE/SPEED CURVE

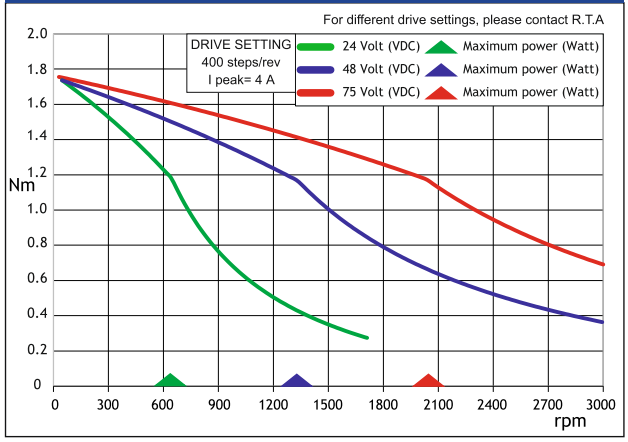

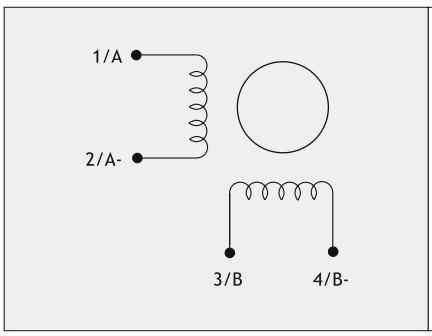

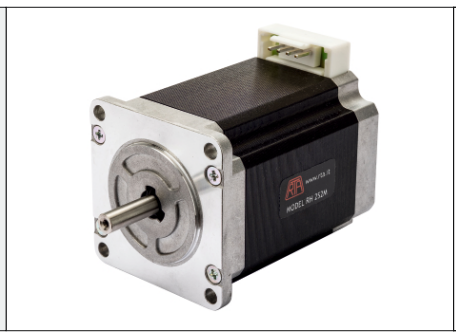

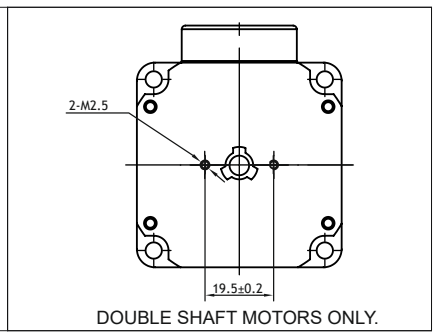

DOUBLE SHAFT MOTORS ONLY.

Suggested R.T.A. drive series: BSD, CSD, FLEX-DRIVE, NDC

RM 2R2M

Dimensions (Unit:mm)

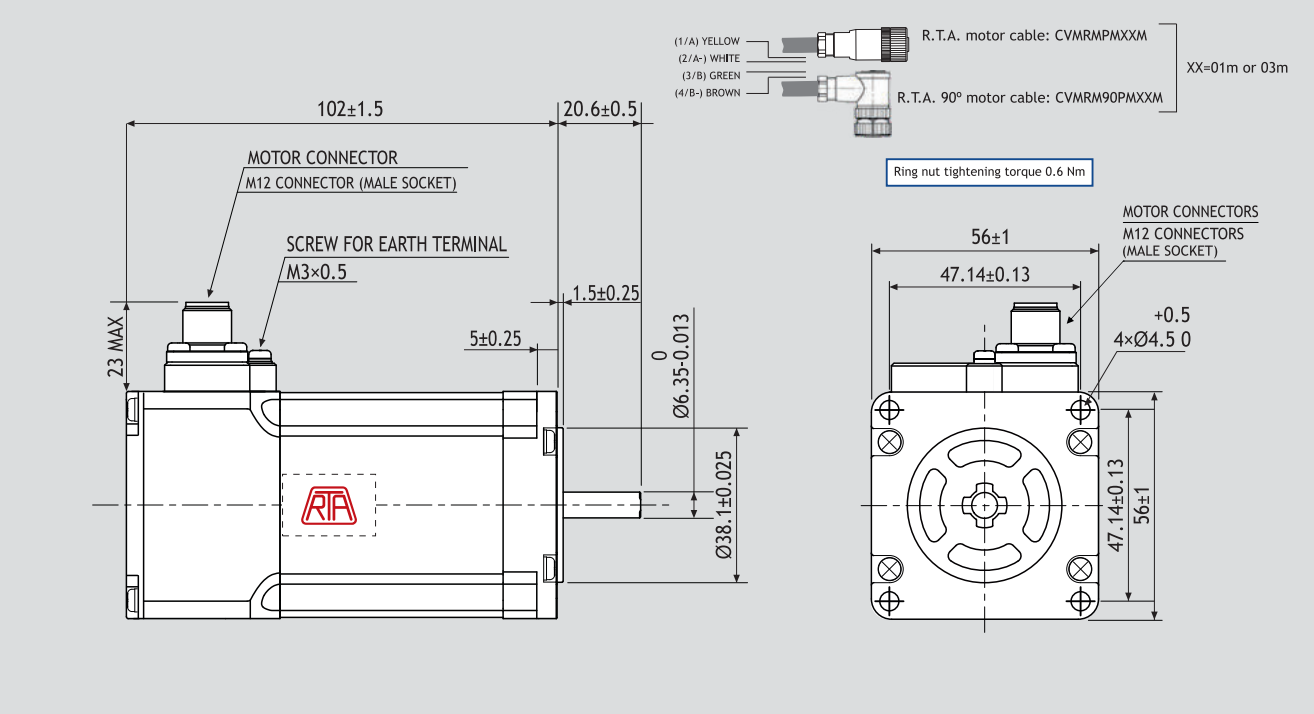

FEATURES

MODEL		RM 2R2M
BASIC STEP ANGLE		1.8 ± 0.09°
BIPOLAR CURRENT	(Amp)	4
RESISTANCE	(Ohm)	0.48
INDUCTANCE	(mH)	2.2
BIPOLAR HOLDING TORQUE	(Ncm)	165
ROTOR INERTIA	(Kgm ^{2} x 10 $^{-7}$)	360
THEORETICAL ACCELERATION	(rad x sec.$^{-2}$)	45800
BACK E.M.F.	(V/Krpm)	31
MASS	(Kg)	1.2
INTERNATIONAL STANDARDS		UL, CSA, CE, RoHS
PROTECTION DEGREE		IP 54
LEADS CODE		V

TORQUE/SPEED CURVE

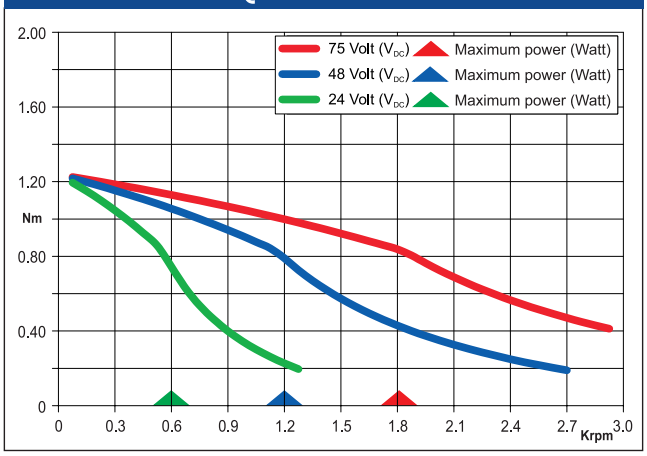

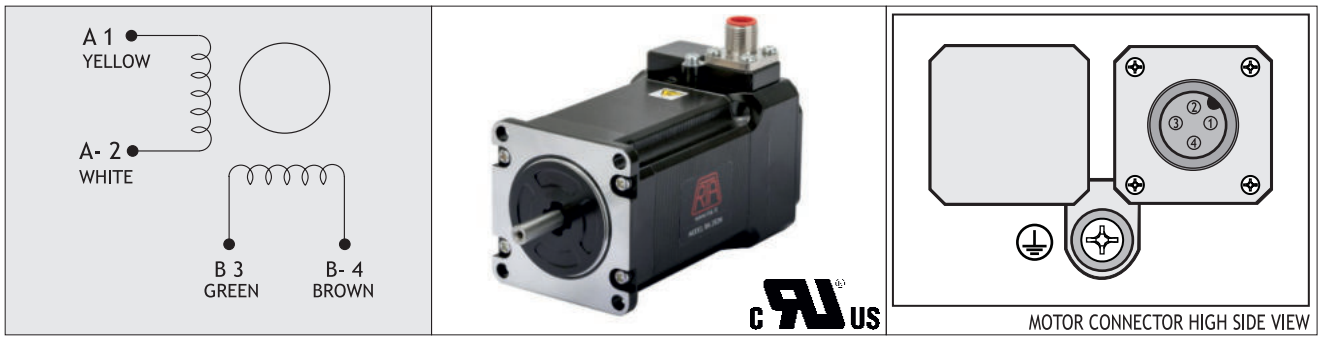

Suggested R.T.A. drive series: CSD, NDC, ADW, HGD, PLUS, FLEX-DRIVE

RM 3R1M

Dimensions (Unit:mm)

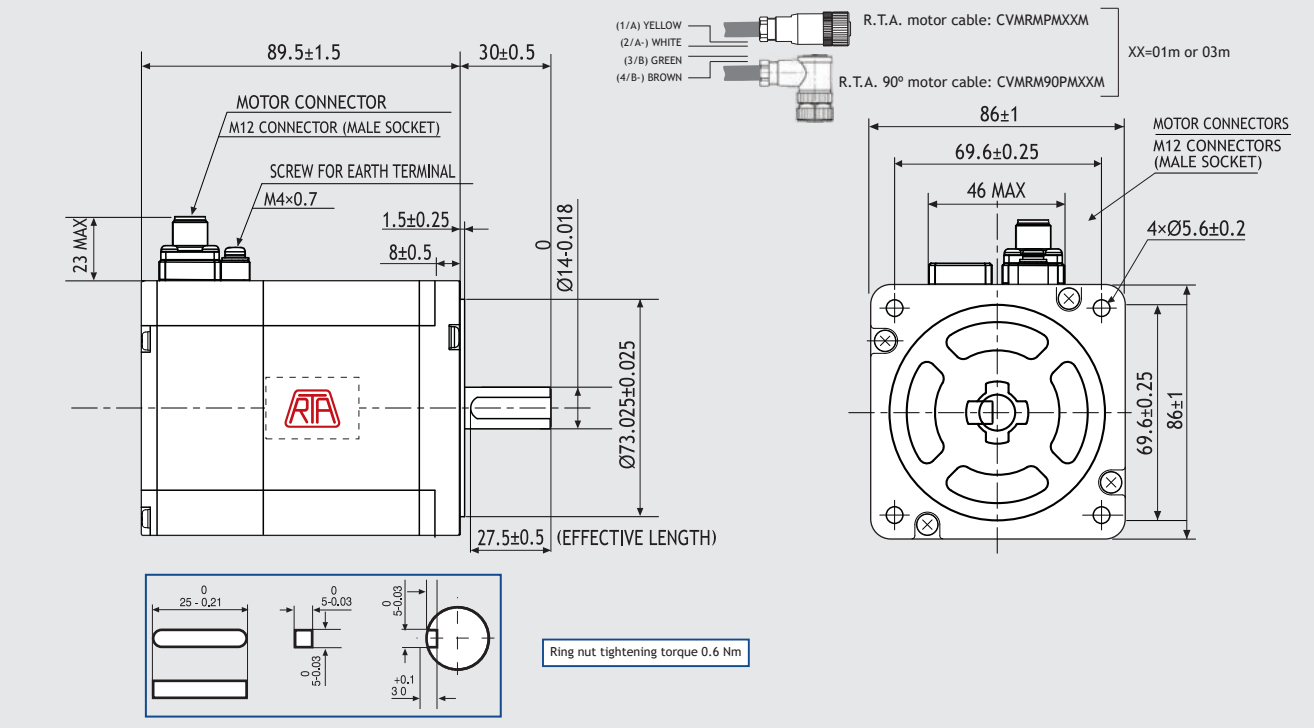

FEATURES

MODEL		RM 3R1M
BASIC STEP ANGLE		1.8 ± 0.09°
BIPOLAR CURRENT	(Amp)	4
RESISTANCE	(Ohm)	0.56
INDUCTANCE	(mH)	3.7
BIPOLAR HOLDING TORQUE	(Ncm)	360
ROTOR INERTIA	(Kgm ^{2} x 10 $^{-7}$)	1480
THEORETICAL ACCELERATION	(rad x sec.$^{-2}$)	24300
BACK E.M.F.	(V/Krpm)	90
MASS	(Kg)	1.95
INTERNATIONAL STANDARDS		UL, CSA, CE, RoHS
INSULATION VOLTAGE	(V)	250 V_{AC} (350 V_{DC})
PROTECTION DEGREE - INSULATION CLASS		IP 54 - CLASS F
LEADS CODE		V

TORQUE/SPEED CURVE

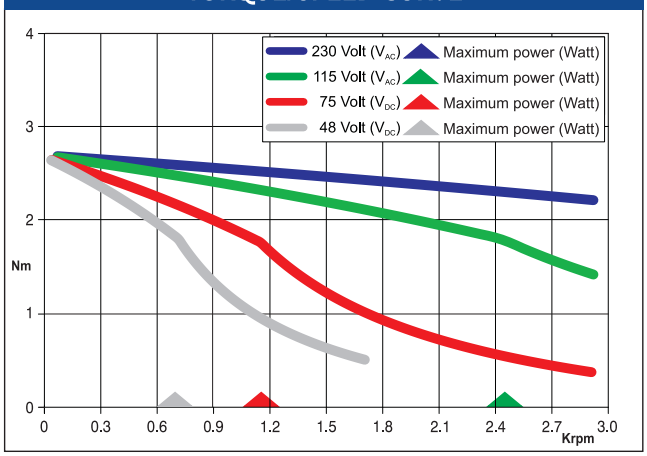

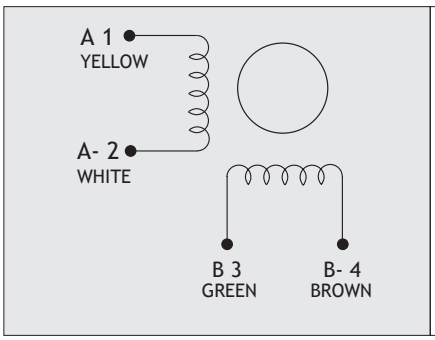

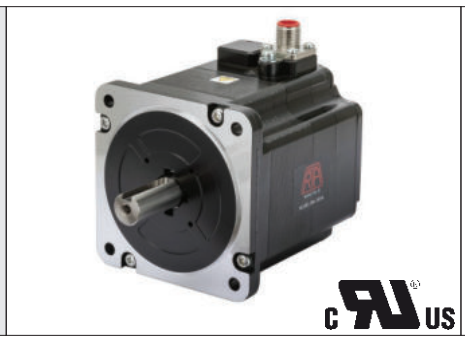

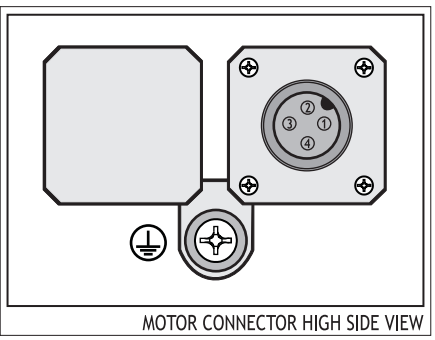

Suggested R.T.A. driver: 230 Vac X-PLUS series/230 Vac X-MIND series.

RM 3R2M

Dimensions (Unit:mm)

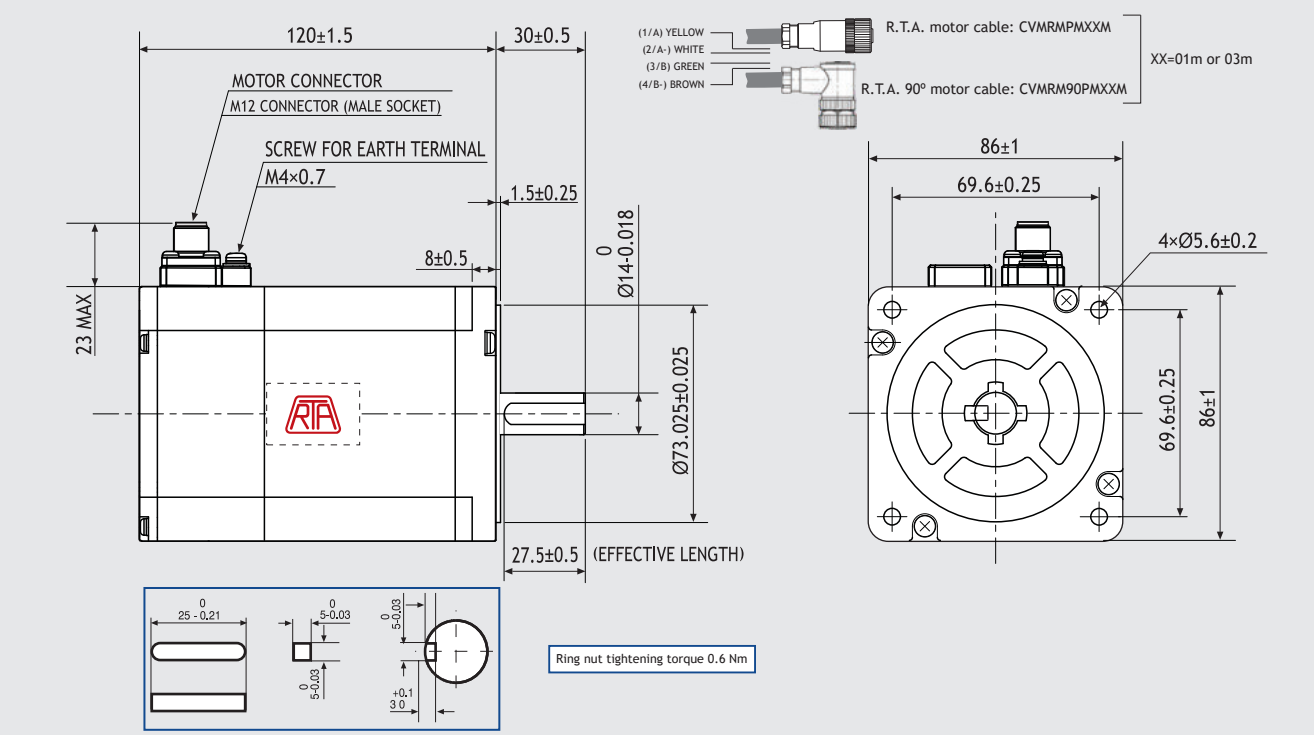

FEATURES

MODEL		RM 3R2M
BASIC STEP ANGLE		1.8 ± 0.09°
BIPOLAR CURRENT	(Amp)	4
RESISTANCE	(Ohm)	0.83
INDUCTANCE	(mH)	6.4
BIPOLAR HOLDING TORQUE	(Ncm)	700
ROTOR INERTIA	(Kgm ^{2} x 10 $^{-7}$)	3000
THEORETICAL ACCELERATION	(rad x sec.$^{-2}$)	23330
BACK E.M.F.	(V/Krpm)	175
MASS	(Kg)	3.1
INTERNATIONAL STANDARDS		UL, CSA, CE, RoHS
INSULATION VOLTAGE	(V)	250 V_{AC} (350 V_{DC})
PROTECTION DEGREE - INSULATION CLASS		IP 54 - CLASS F
LEADS CODE		V

TORQUE/SPEED CURVE

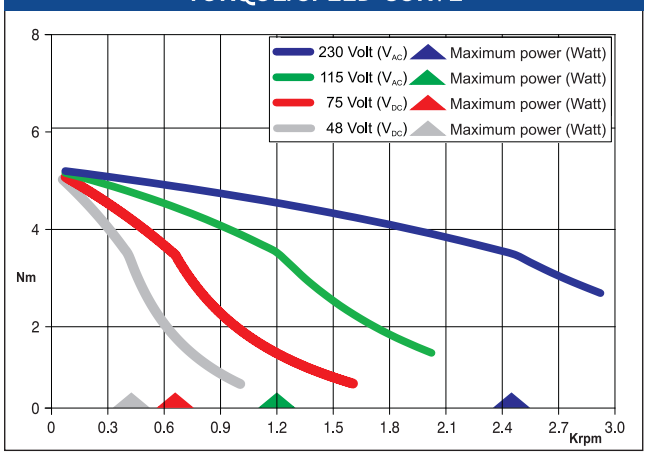

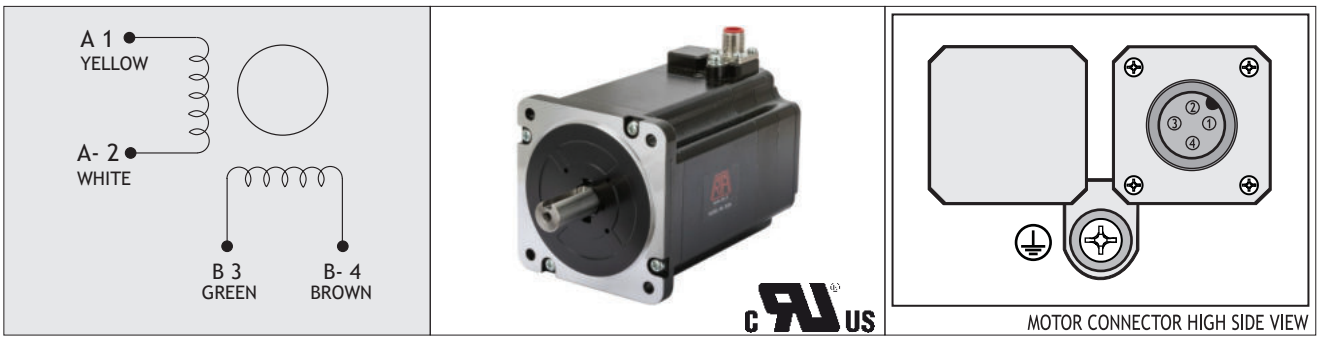

Suggested R.T.A. driver: 230 Vac X-PLUS series/230 Vac X-MIND series.

RM 3R3M

Dimensions (Unit:mm)

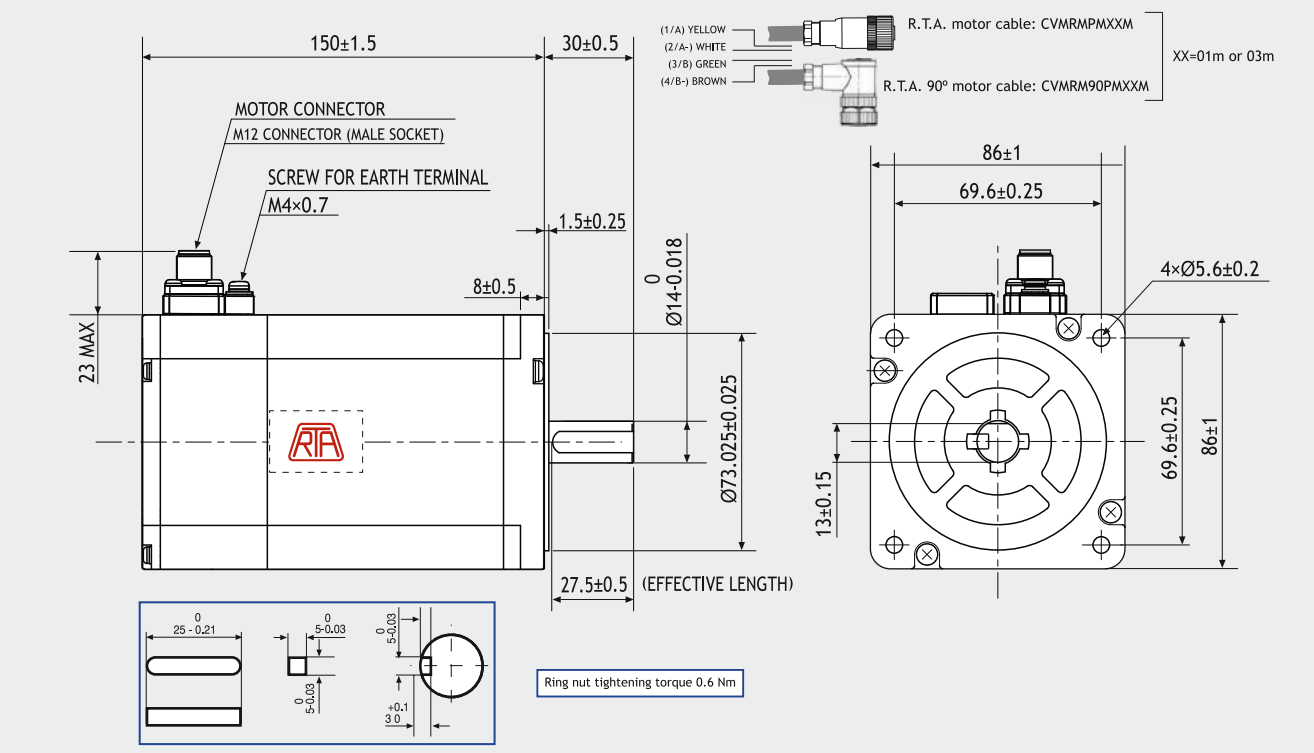

FEATURES

MODEL		RM 3R3M
BASIC STEP ANGLE		1.8 ± 0.09°
BIPOLAR CURRENT	(Amp)	4
RESISTANCE	(Ohm)	1
INDUCTANCE	(mH)	7.9
BIPOLAR HOLDING TORQUE	(Ncm)	920
ROTOR INERTIA	(Kgm ^{2} x 10 $^{-7}$)	4500
THEORETICAL ACCELERATION	(rad x sec.$^{-2}$)	20500
BACK E.M.F.	(V/Krpm)	241
MASS	(Kg)	4.2
INTERNATIONAL STANDARDS		UL, CSA, CE, RoHS
INSULATION VOLTAGE	(V)	250 V_{AC} (350 V_{DC})
PROTECTION DEGREE - INSULATION CLASS		IP 54 - CLASS F
LEADS CODE		V

TORQUE/SPEED CURVE

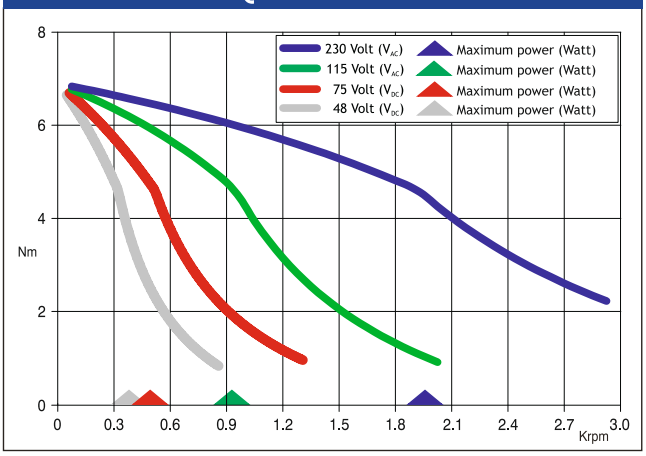

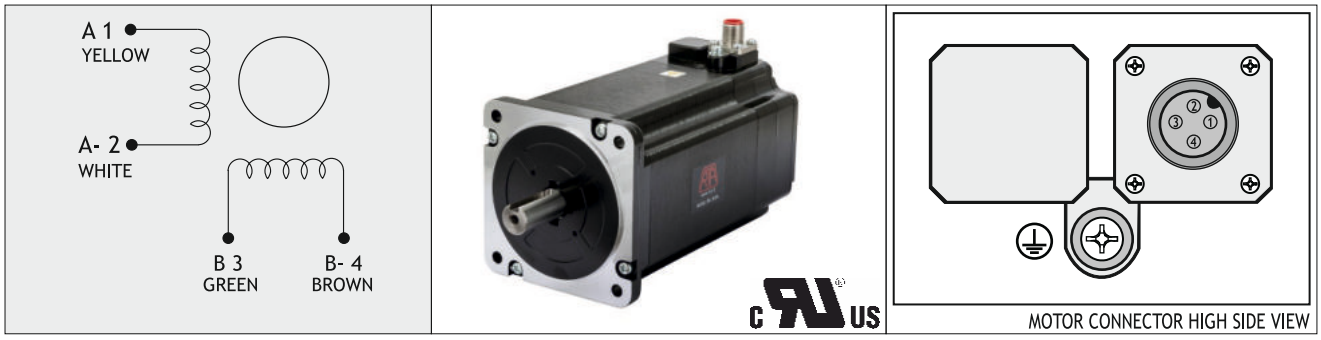

Suggested R.T.A. drive series: 230 Vac X-PLUS

SP 2563-5000

SANYO DENKI
SANMOTION

Dimensions (Unit:mm)

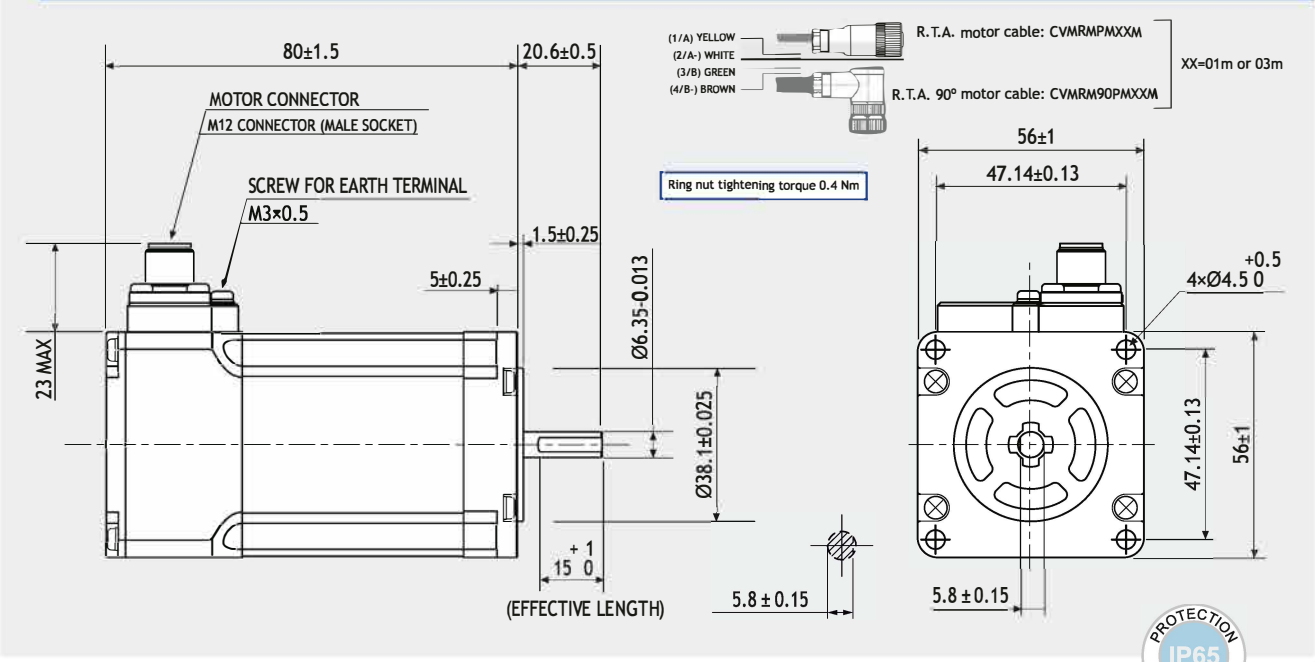

FEATURES

MODEL		SP 2563-5000
BASIC STEP ANGLE		1.8 ± 0.09°
BIPOLAR CURRENT	(A)	1
RESISTANCE	(Ohm)	5.8
INDUCTANCE	(mH)	29
BIPOLAR HOLDING TORQUE	(Ncm)	100
ROTOR INERTIA	(Kgm ^{2} x 10 $^{-7}$)	210
THEORETICAL ACCELERATION	(rad x sec.$^{-2}$)	47600
BACK E.M.F.	(V/Krpm)	100
MASS	(Kg)	0.9
INTERNATIONAL STANDARDS		UL, CSA, CE, RoHS
INSULATION VOLTAGE	(V)	250 V_{AC} (350 V_{DC})
PROTECTION DEGREE - INSULATION CLASS		IP65 - F

TORQUE CURVE

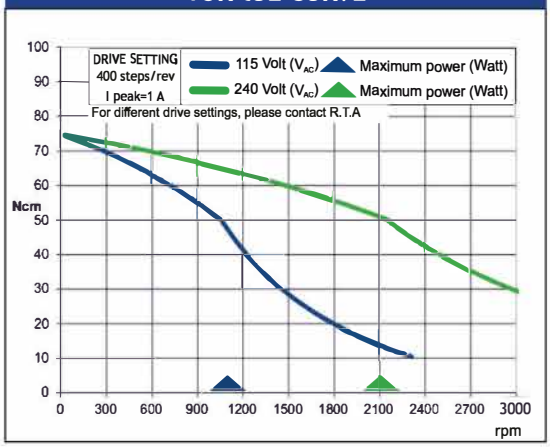

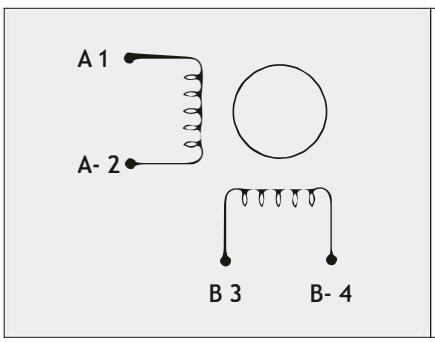

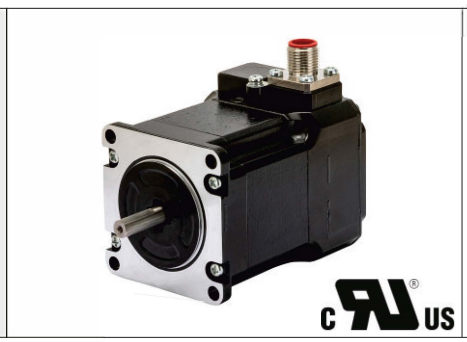

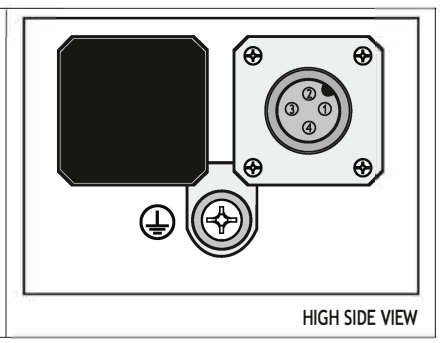

Suggested R.T.A. drive model: X-PLUS L2

SP 2563-5200

SANYO DENKI
SANMOTION

Dimensions (Unit:mm)

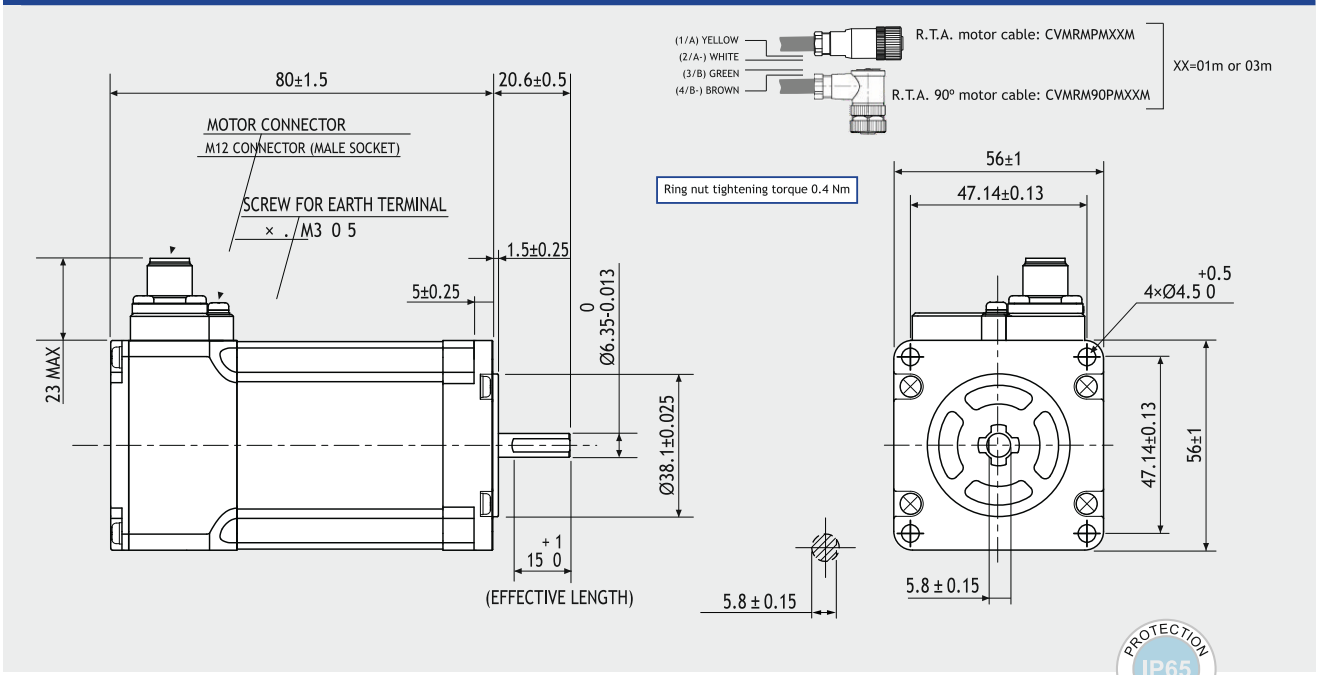

FEATURES

MODEL		SP 2563-5200
BASIC STEP ANGLE		1.8 ± 0.09°
BIPOLAR CURRENT	(A)	3
RESISTANCE	(Ohm)	0.75
INDUCTANCE	(mH)	3.4
BIPOLAR HOLDING TORQUE	(Ncm)	100
ROTOR INERTIA	(Kgm ^{2} x 10 $^{-7}$)	210
THEORETICAL ACCELERATION	(rad x sec.$^{-2}$)	47600
BACK E.M.F.	(V/Krpm)	33
MASS	(Kg)	0.9
INTERNATIONAL STANDARDS		UL, CSA, CE, RoHS
INSULATION VOLTAGE	(V)	250 V_{AC} (350 V_{DC})
PROTECTION DEGREE - INSULATION CLASS		IP65 - F

TORQUE CURVE

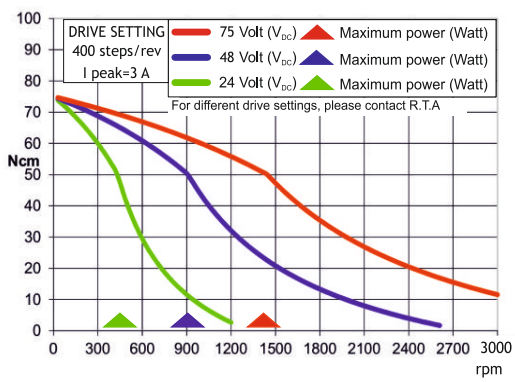

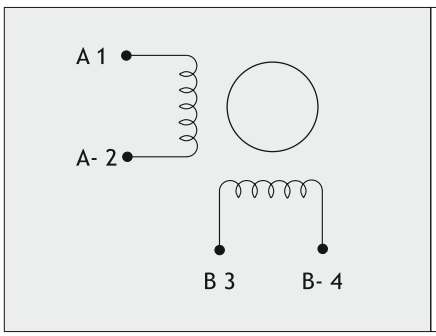

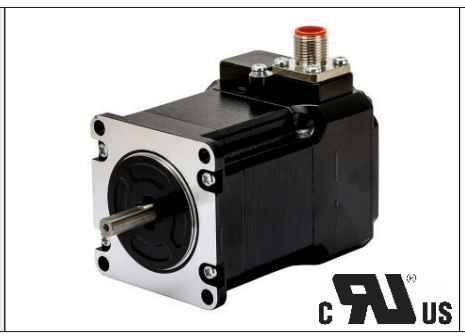

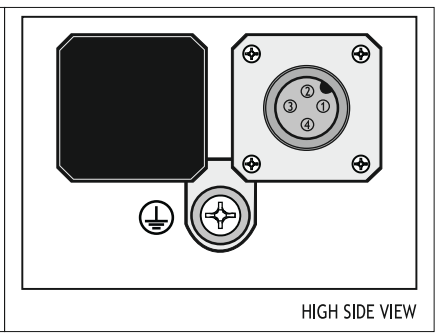

Suggested R.T.A. drive series: CSD, NDC, ADW, HGD, PLUS, FLEX-DRIVE

SP 2566-5200

SANYO DENKI
SANMOTION

Dimensions (Unit:mm)

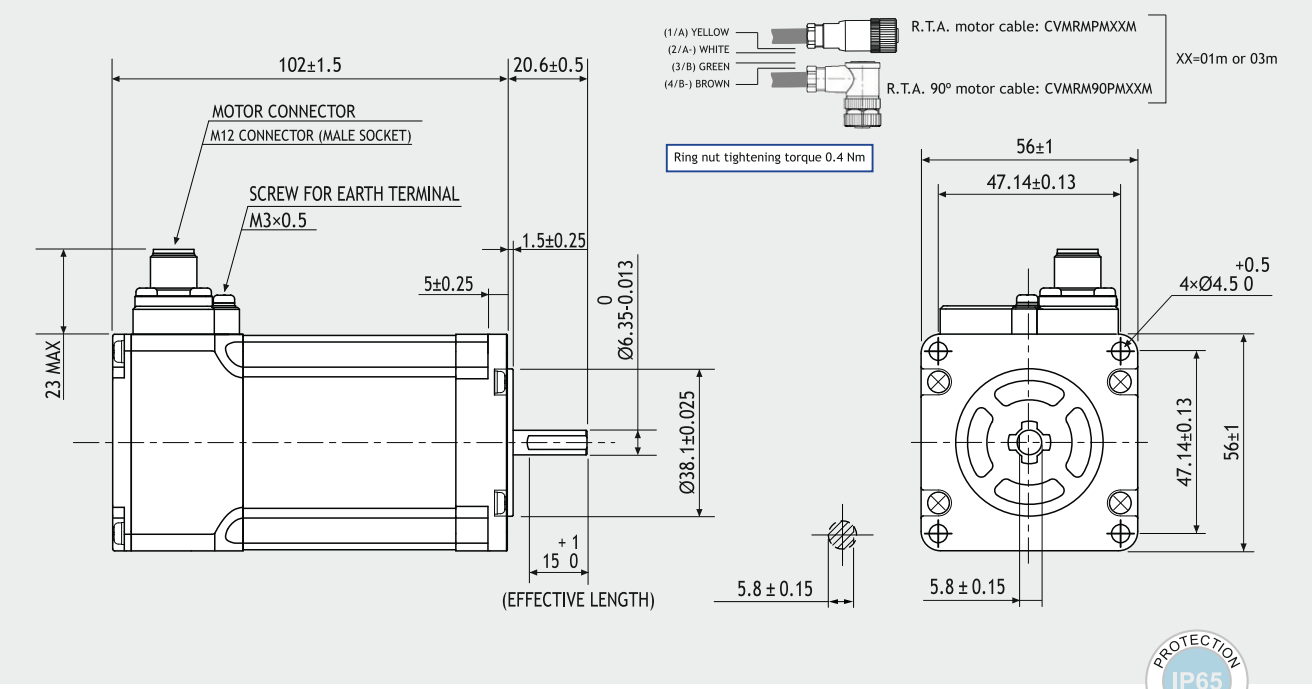

FEATURES

MODEL		SP 2566-5200
BASIC STEP ANGLE		1.8 ± 0.09°
BIPOLAR CURRENT	(Amp)	3
RESISTANCE	(Ohm)	0.94
INDUCTANCE	(mH)	4.4
BIPOLAR HOLDING TORQUE	(Ncm)	170
ROTOR INERTIA	(Kgm ^{2} x 10 $^{-7}$)	360
THEORETICAL ACCELERATION	(rad x sec.$^{-2}$)	47200
BACK E.M.F.	(V/Krpm)	55
MASS	(Kg)	1.2
INTERNATIONAL STANDARDS		UL, CSA, CE, RoHS
INSULATION VOLTAGE	(V)	250 V_{AC} (350 V_{DC})
PROTECTION DEGREE - INSULATION CLASS		IP65 - F

TORQUE/SPEED CURVE

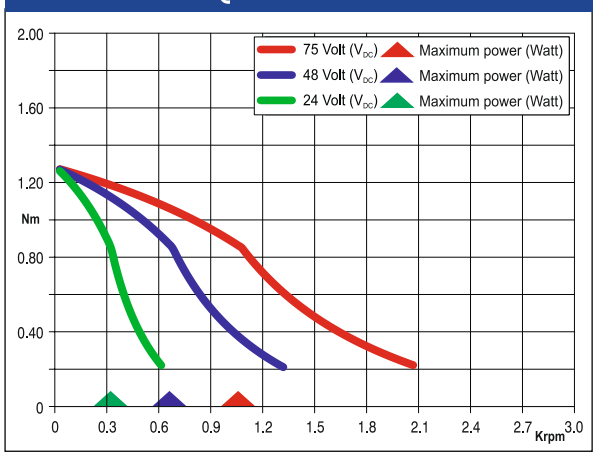

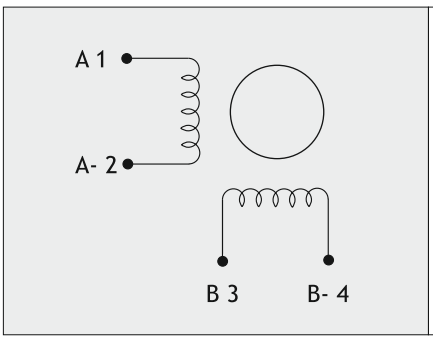

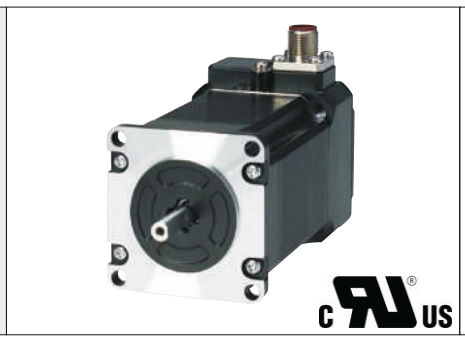

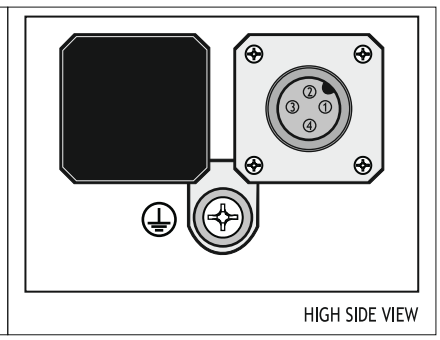

Suggested R.T.A. drive series: CSD, NDC, ADW, HGD, PLUS, FLEX-DRIVE

SP 2862-5100

SANYO DENKI
SANMOTION

Dimensions (Unit:mm)

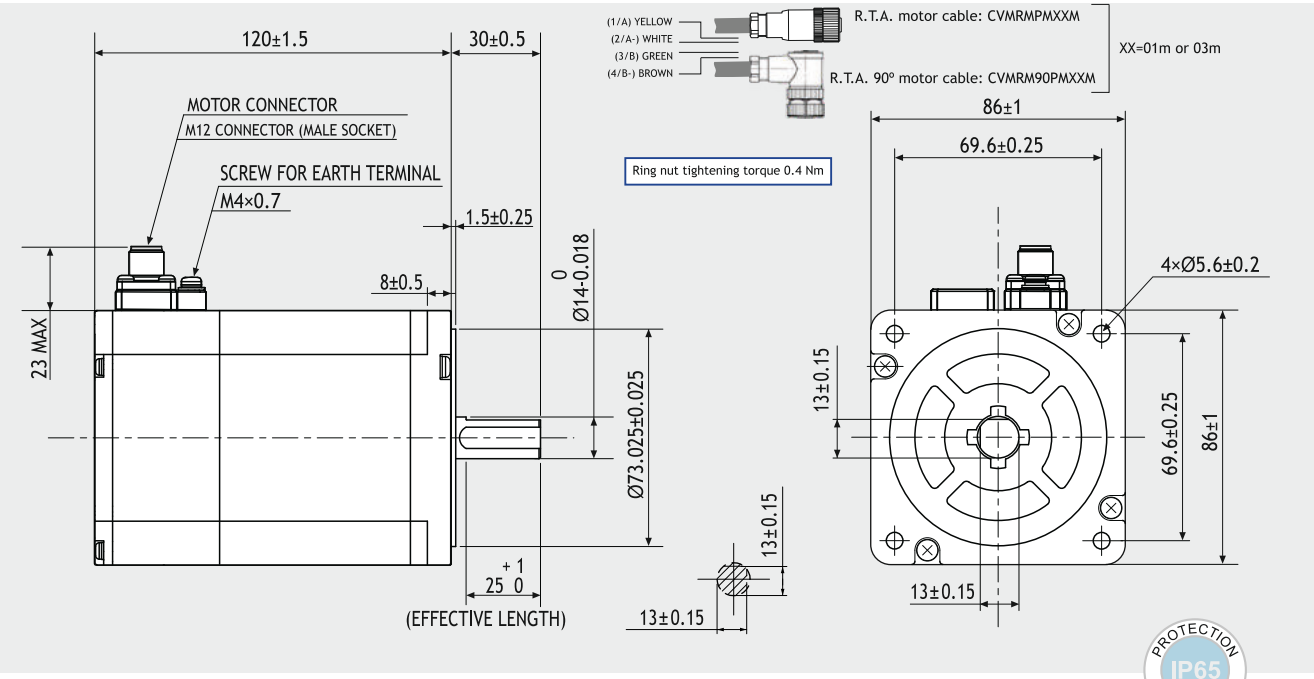

FEATURES

MODEL		SP 2862-5100
BASIC STEP ANGLE		1.8 ± 0.09°
BIPOLAR CURRENT	(Amp)	4
RESISTANCE	(Ohm)	0.83
INDUCTANCE	(mH)	6.4
BIPOLAR HOLDING TORQUE	(Ncm)	700
ROTOR INERTIA	(Kgm ^{2} x 10 $^{-7}$)	3000
THEORETICAL ACCELERATION	(rad x sec.$^{-2}$)	23300
BACK E.M.F.	(V/Krpm)	175
MASS	(Kg)	3.1
INTERNATIONAL STANDARDS		UL, CSA, CE, RoHS
INSULATION VOLTAGE	(V)	250 V_{AC} (350 V_{DC})
PROTECTION DEGREE - INSULATION CLASS		IP65 - F

TORQUE/SPEED CURVE

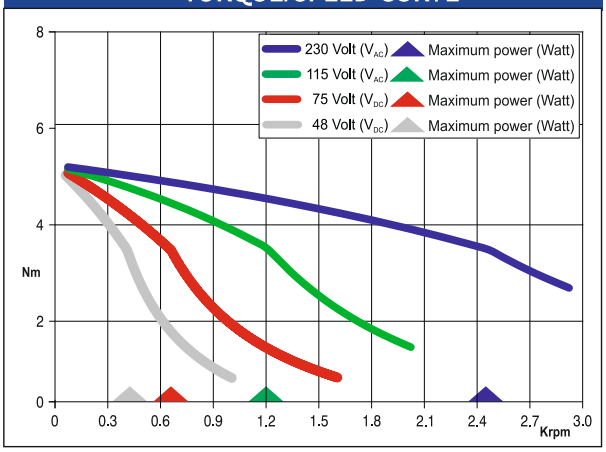

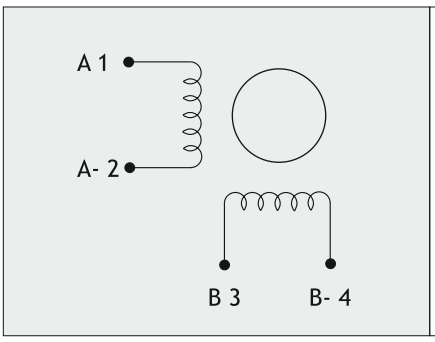

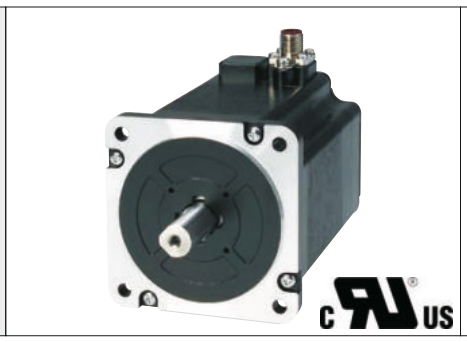

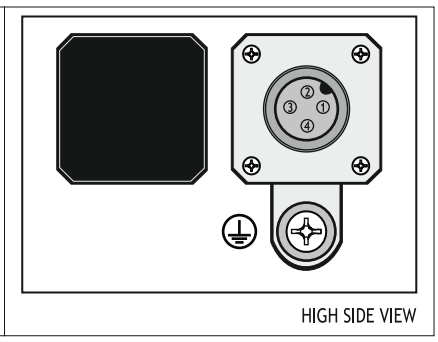

Suggested R.T.A. drive series: 230 Vac X-PLUS

SP 2863-5100

SANYO DENKI
SANMOTION

Dimensions (Unit:mm)

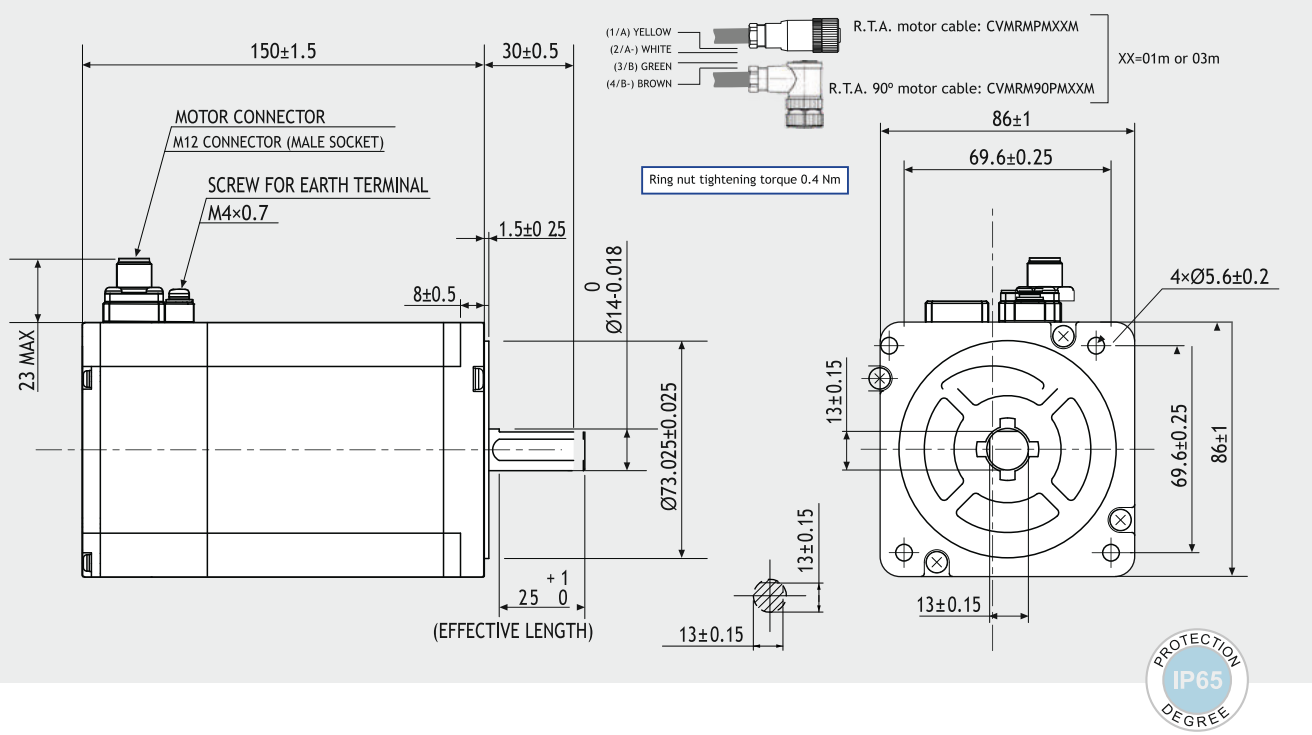

FEATURES

MODEL		SP 2863-5100
BASIC STEP ANGLE		1.8 ± 0.09°
BIPOLAR CURRENT	(Amp)	4
RESISTANCE	(Ohm)	1
INDUCTANCE	(mH)	7.9
BIPOLAR HOLDING TORQUE	(Ncm)	900
ROTOR INERTIA	(Kgm ^{2} x 10 $^{-7}$)	4500
THEORETICAL ACCELERATION	(rad x sec.$^{-2}$)	20000
BACK E.M.F.	(V/Krpm)	225
MASS	(Kg)	4.2
INTERNATIONAL STANDARDS		UL, CSA, CE, RoHS
INSULATION VOLTAGE	(V)	250 V_{AC} (350 V_{DC})
PROTECTION DEGREE - INSULATION CLASS		IP65 - F

TORQUE/SPEED CURVE

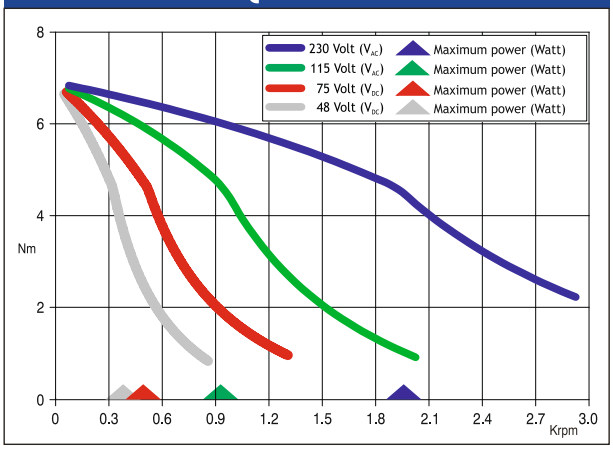

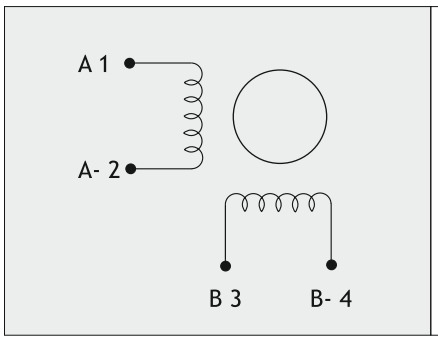

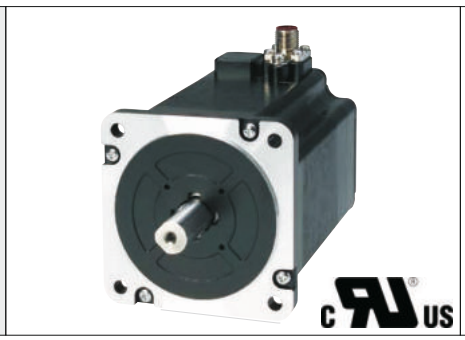

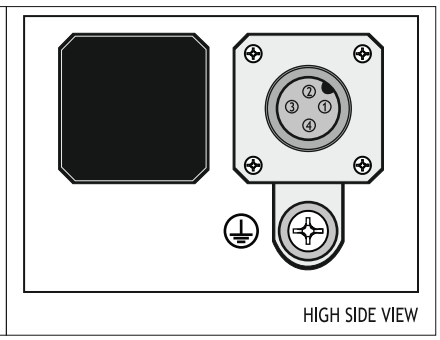

Suggested R.T.A. drive series: 230 Vac X-PLUS

SP2566-50SX00

SANYO DENKI
SANMOTION

Dimensions (Unit:mm)

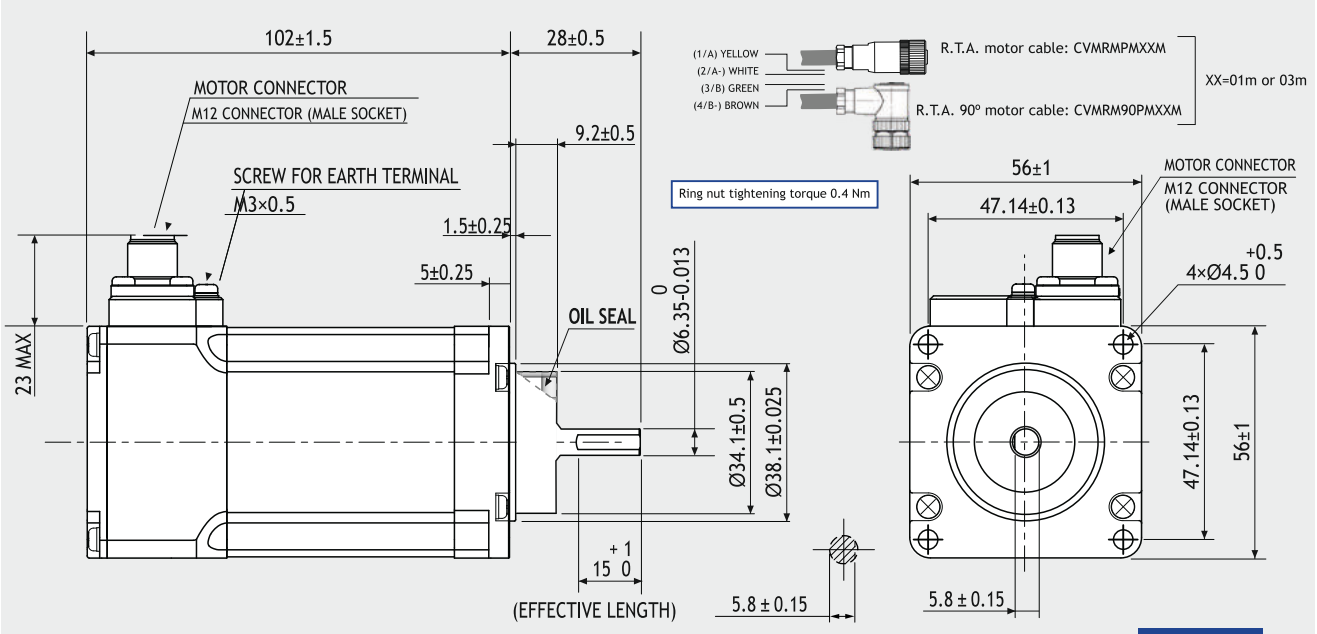

FULL IP65

FEATURES

MODEL		SP2566-50SX00
BASIC STEP ANGLE		1.8° ± 0.09°
BIPOLAR CURRENT	(Amp)	1.0
RESISTANCE	(Ohm)	7.7
INDUCTANCE	(mH)	35.4
BIPOLAR HOLDING TORQUE	(Ncm)	170
ROTOR INERTIA	(Kgm ^{2} x 10 $^{-7}$)	360
THEORETICAL ACCELERATION	(rad x sec.$^{-2}$)	47200
BACK E.M.F.	(V/Krpm)	160
MASS	(Kg)	1.2
INTERNATIONAL STANDARDS		UL, CSA, CE, RoHS
INSULATION VOLTAGE	(V)	250 V_{AC} (350 V_{DC})
PROTECTION DEGREE - INSULATION CLASS		FULL IP65 - F
LEADS CODE		V

TORQUE/SPEED CURVE

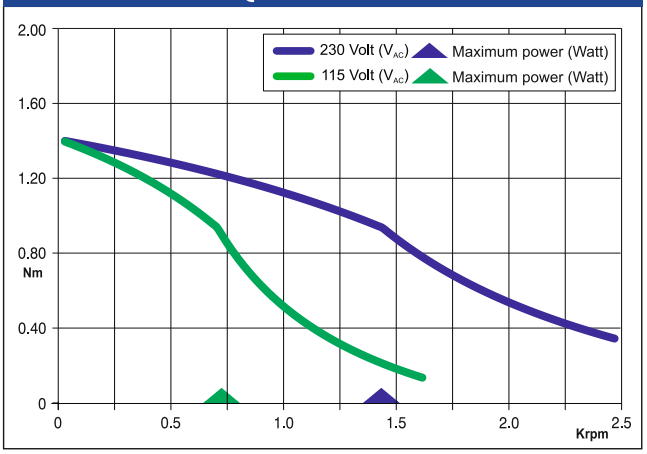

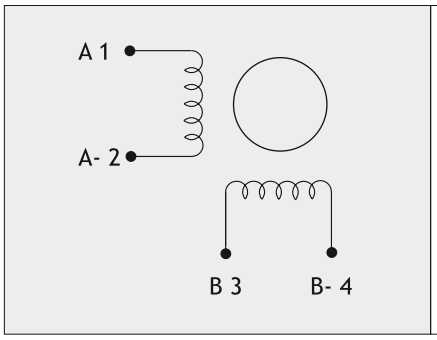

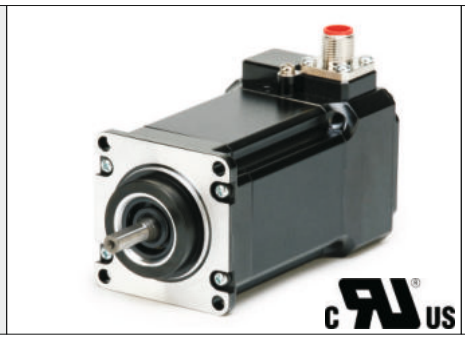

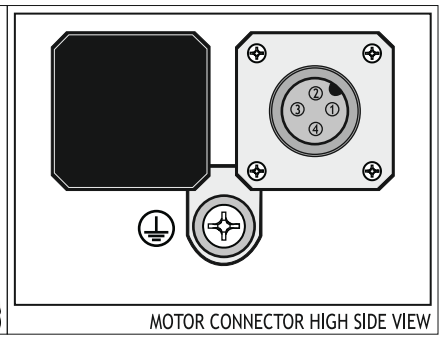

Suggested R.T.A. drive series: X-PLUS L2

SP2566-52SX00

SANYO DENKI
SANMOTION

Dimensions (Unit:mm)

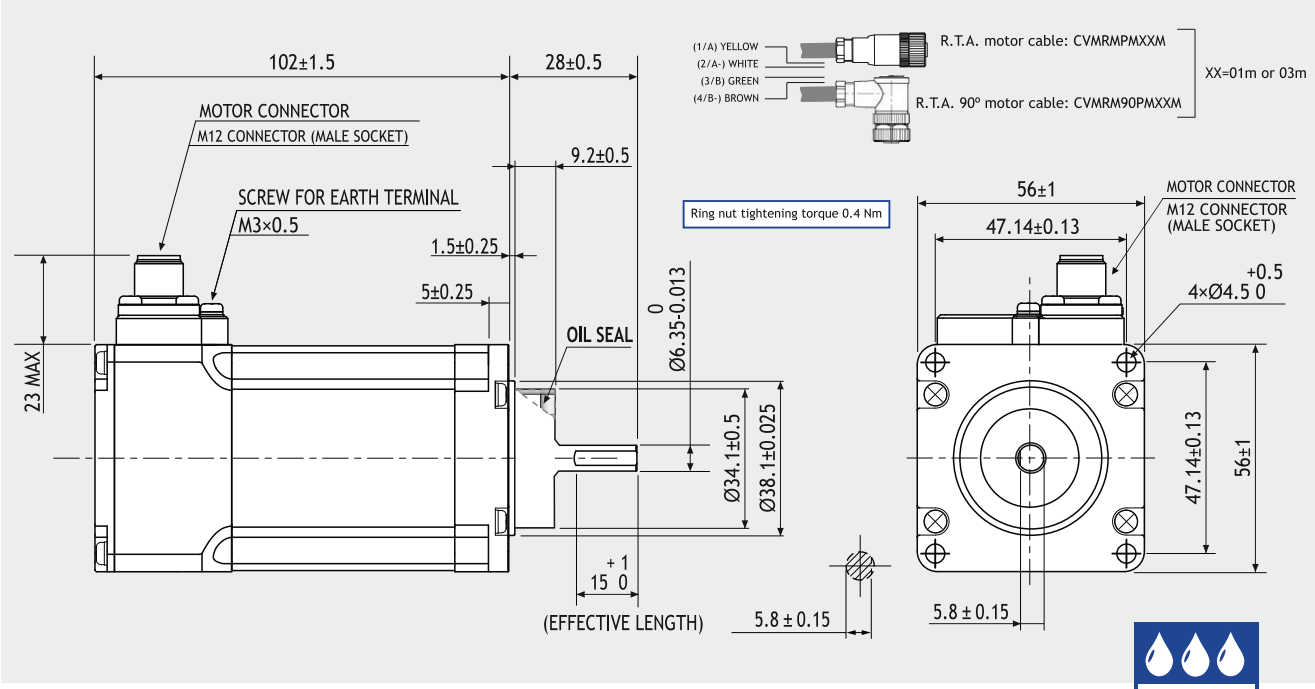

FEATURES

MODEL		SP2566-52SX00
BASIC STEP ANGLE		1.8° ± 0.09°
BIPOLAR CURRENT	(Amp)	3.0
RESISTANCE	(Ohm)	0.94
INDUCTANCE	(mH)	4.4
BIPOLAR HOLDING TORQUE	(Ncm)	170
ROTOR INERTIA	(Kgm ^{2} x 10 $^{-7}$)	360
THEORETICAL ACCELERATION	(rad x sec.$^{-2}$)	47200
BACK E.M.F.	(V/Krpm)	55
MASS	(Kg)	1.2
INTERNATIONAL STANDARDS		UL, CSA, CE, RoHS
INSULATION VOLTAGE	(V)	250 V_{AC} (350 V_{DC})
PROTECTION DEGREE - INSULATION CLASS		FULL IP65 - F
LEADS CODE		V

TORQUE/SPEED CURVE

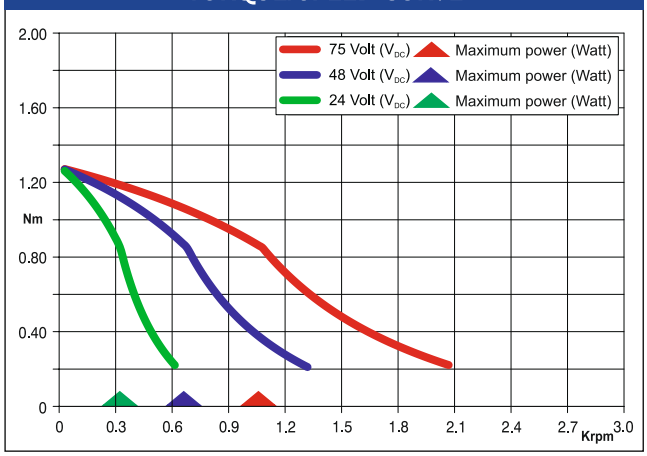

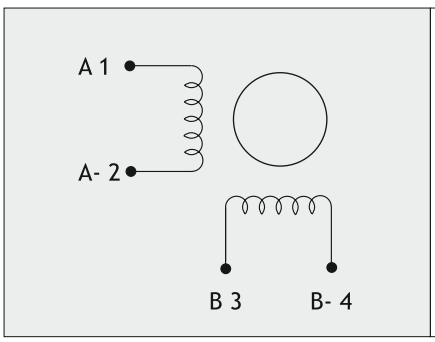

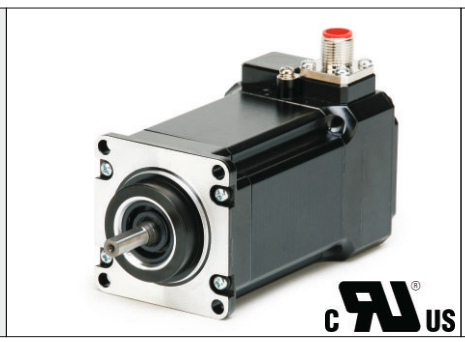

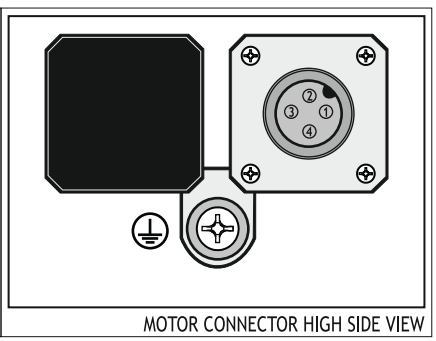

Suggested R.T.A. drive series: CSD, NDC, ADW, HGD, PLUS, FLEX-DRIVE

SP2861-51SX01

SANYO DENKI
SANMOTION

Dimensions (Unit:mm)

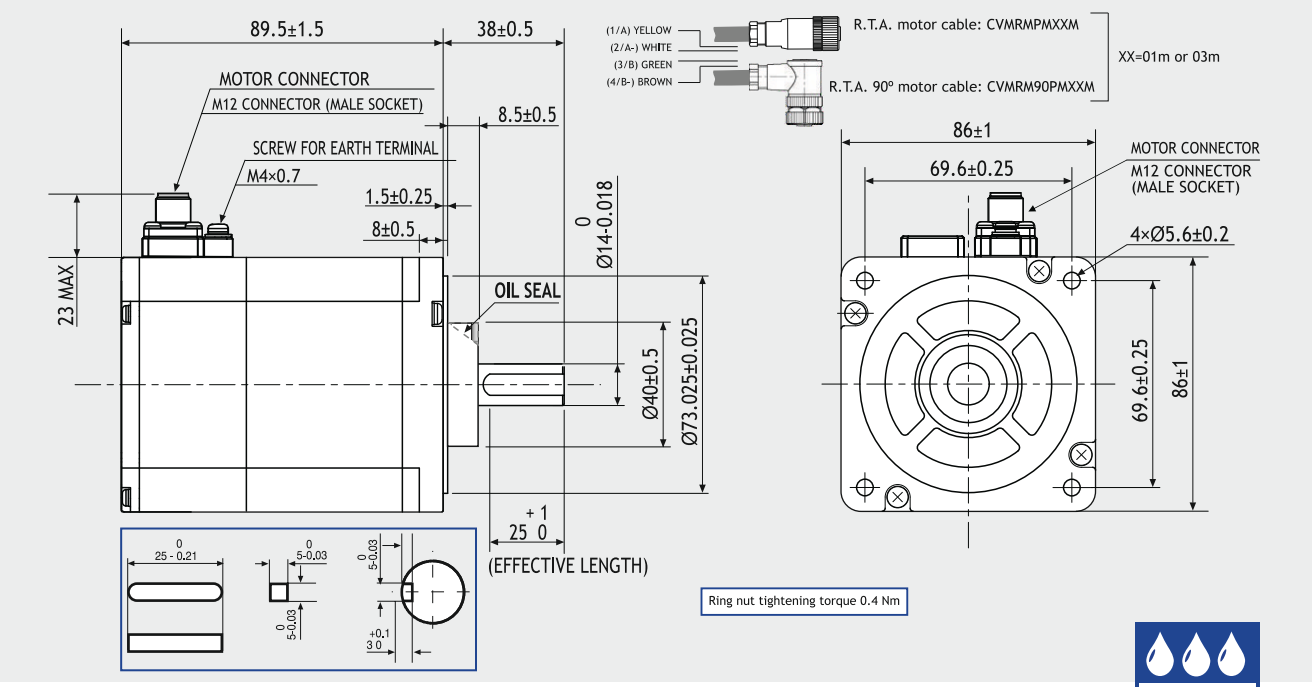

FEATURES

MODEL		SP2861-51SX01
BASIC STEP ANGLE		1.8° ± 0.09°
BIPOLAR CURRENT	(Amp)	4.0
RESISTANCE	(Ohm)	0.56
INDUCTANCE	(mH)	3.7
BIPOLAR HOLDING TORQUE	(Ncm)	360
ROTOR INERTIA	(Kgm ^{2} x 10 $^{-7}$)	1480
THEORETICAL ACCELERATION	(rad x sec.$^{-2}$)	24300
BACK E.M.F.	(V/Krpm)	90
MASS	(Kg)	1.9
INTERNATIONAL STANDARDS		UL, CSA, CE, RoHS
INSULATION VOLTAGE	(V)	250 V_{AC} (350 V_{DC})
PROTECTION DEGREE - INSULATION CLASS		FULL IP65 - F
LEADS CODE		V

TORQUE/SPEED CURVE

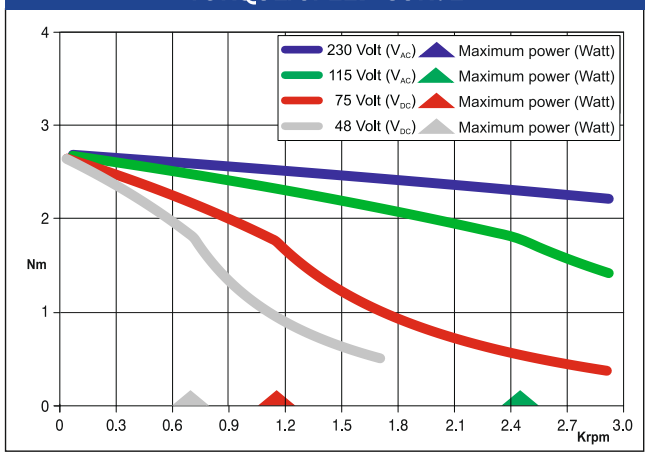

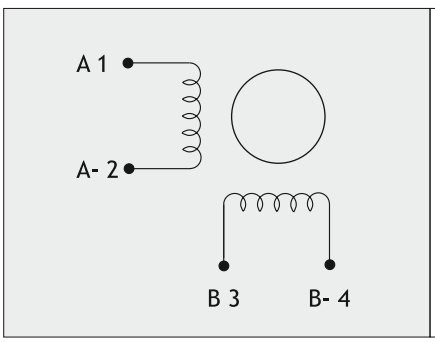

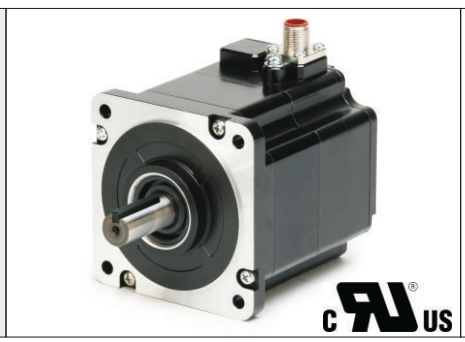

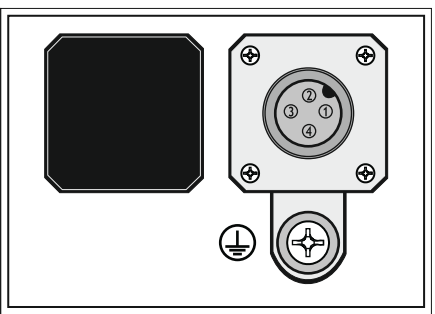

MOTOR CONNECTOR HIGH SIDE VIEW

Suggested R.T.A. drive series: 230 Vac X-PLUS

SP2862-51SX01

SANYO DENKI
SANMOTION

Dimensions (Unit:mm)

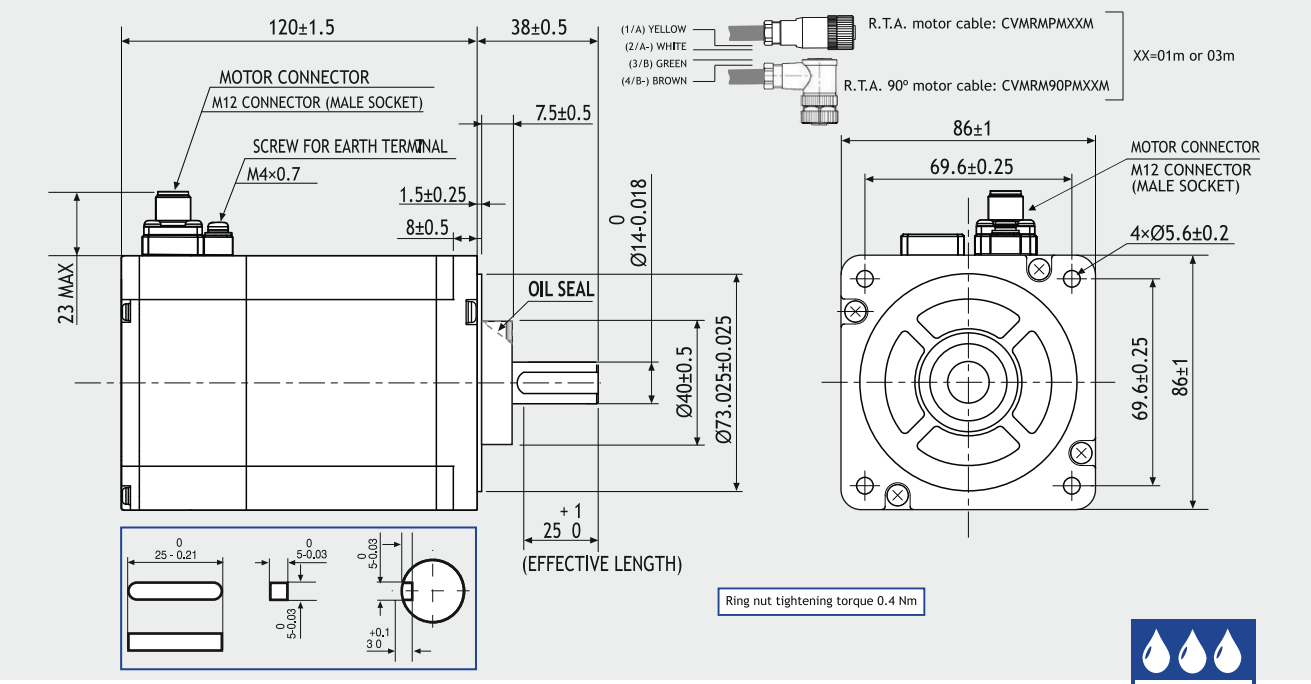

FULL IP65

FEATURES

MODEL		SP2862-51SX01
BASIC STEP ANGLE		1.8° ± 0.09°
BIPOLAR CURRENT	(Amp)	4.0
RESISTANCE	(Ohm)	0.83
INDUCTANCE	(mH)	6.4
BIPOLAR HOLDING TORQUE	(Ncm)	700
ROTOR INERTIA	(Kgm ^{2} x 10 $^{-7}$)	3000
THEORETICAL ACCELERATION	(rad x sec.$^{-2}$)	23300
BACK E.M.F.	(V/Krpm)	175
MASS	(Kg)	3.1
INTERNATIONAL STANDARDS		UL, CSA, CE, RoHS
INSULATION VOLTAGE	(V)	250 V_{AC} (350 V_{DC})
PROTECTION DEGREE - INSULATION CLASS		FULL IP65 - F
LEADS CODE		V

TORQUE/SPEED CURVE

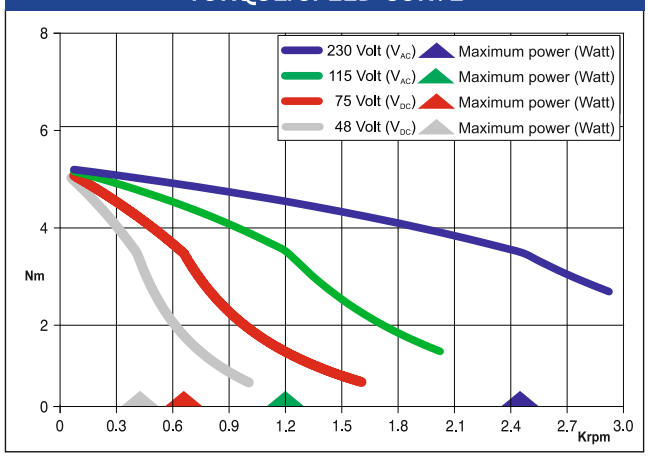

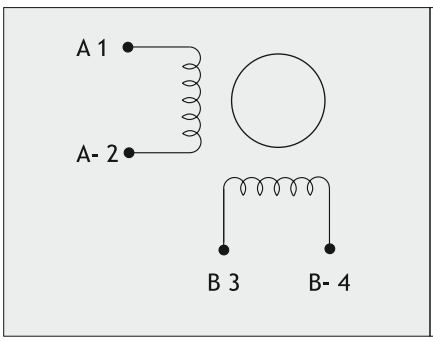

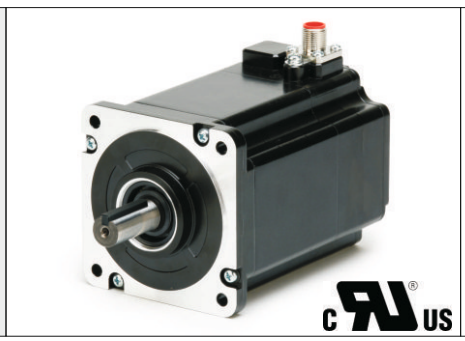

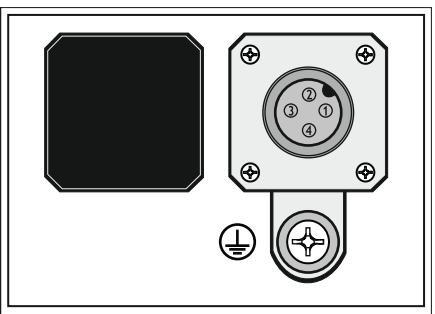

MOTOR CONNECTOR HIGH SIDE VIEW

Suggested R.T.A. drive series: 230 Vac X-PLUS

SP2863-51SX01

SANYO DENKI
SANMOTION

Dimensions (Unit:mm)

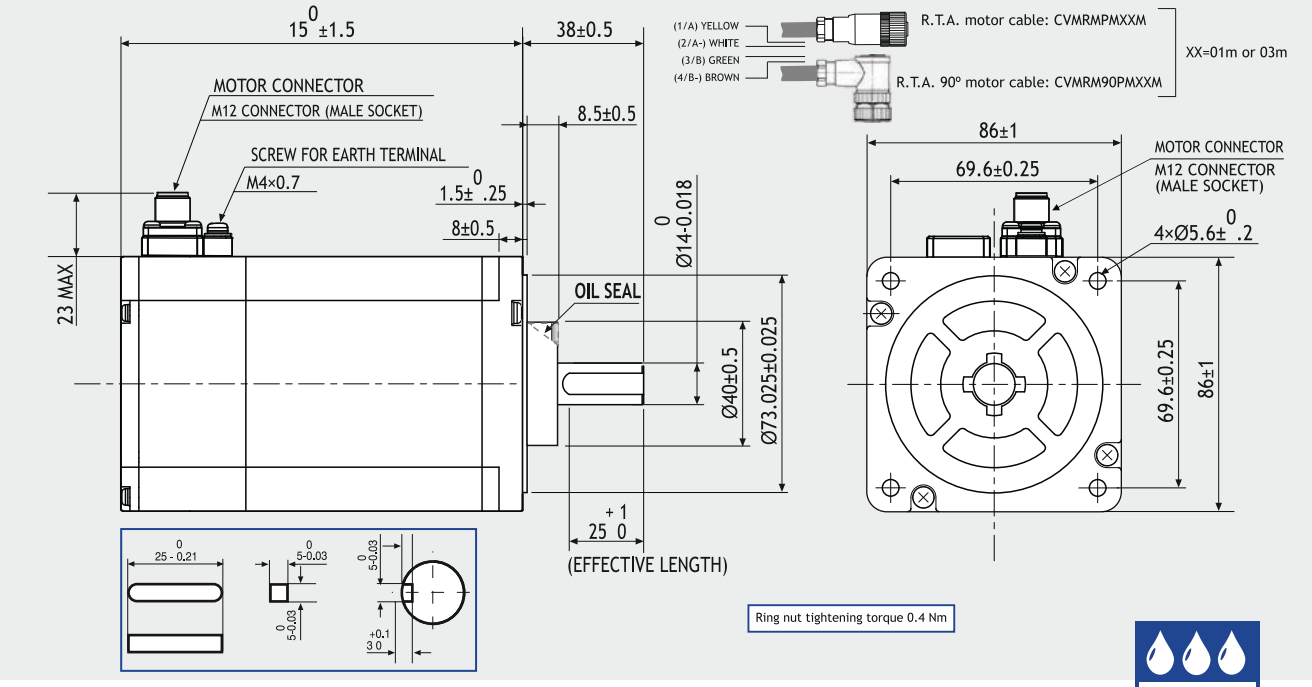

FEATURES

MODEL		SP2863-51SX01
BASIC STEP ANGLE		1.8° ± 0.09°
BIPOLAR CURRENT	(Amp)	4.0
RESISTANCE	(Ohm)	1.0
INDUCTANCE	(mH)	7.9
BIPOLAR HOLDING TORQUE	(Ncm)	920
ROTOR INERTIA	(Kgm ^{2} x 10 $^{-7}$)	4500
THEORETICAL ACCELERATION	(rad x sec.$^{-2}$)	20500
BACK E.M.F.	(V/Krpm)	241
MASS	(Kg)	4.2
INTERNATIONAL STANDARDS		UL, CSA, CE, RoHS
INSULATION VOLTAGE	(V)	250 V_{AC} (350 V_{DC})
PROTECTION DEGREE - INSULATION CLASS		FULL IP65 - F
LEADS CODE		V

TORQUE/SPEED CURVE

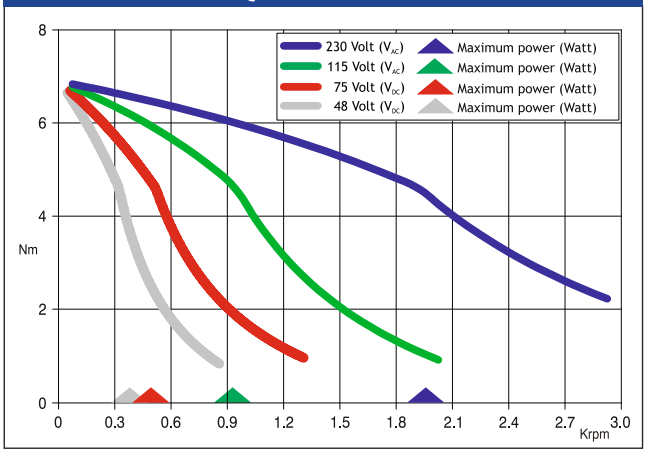

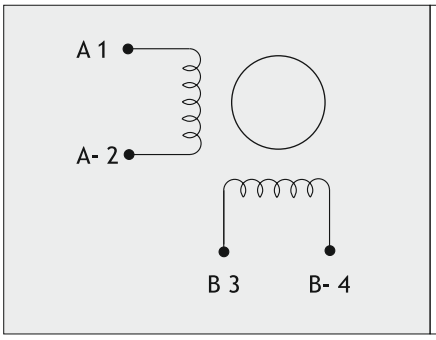

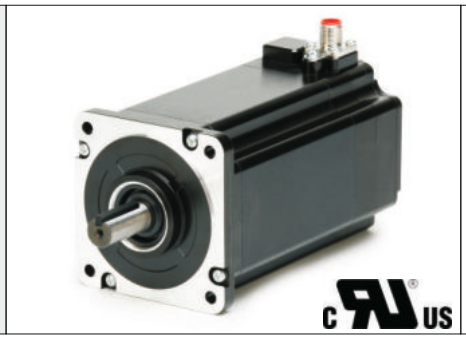

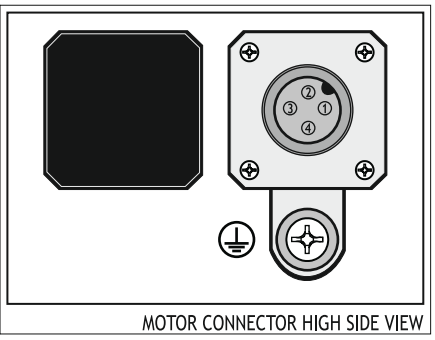

Suggested R.T.A. drive series: 230 Vac X-PLUS

STEPPING MOTORS

INDUSTRIAL STEPPING MOTORS WITH ENCODER

RH 1S0M-0XX0

Dimensions (Unit:mm)

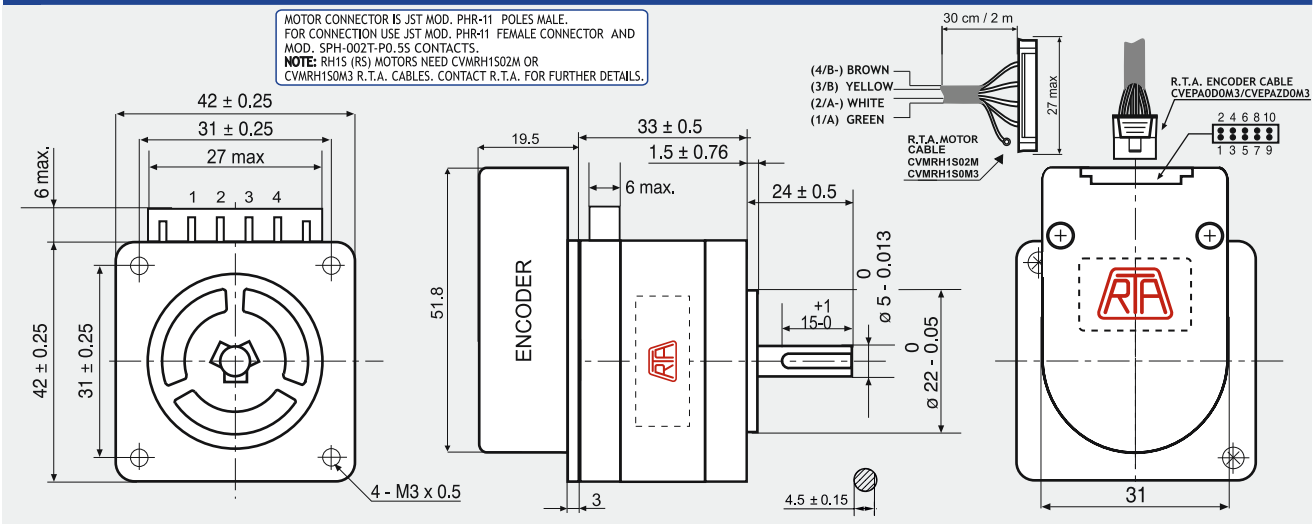

ENCODER OPTIONS:		RH 1S0M-04D0	RH 1S0M-04E0	RH 1S0M-0HE0
RESOLUTION		400 cpr	400 cpr	4000 cpr
INDEX		No	Yes	Yes
CURRENT CONSUMPTION	(mA)	50	50	85
HIGH LEVEL OUTPUT	(Volt)	5 (TIP) - 4.75 (MIN) (I_{MAX}=25mA)	3.4 (TIP) - 2.4 (MIN) (I_{MAX}=20mA)	3.4 (TIP) - 2.4 (MIN) (I_{MAX}=20mA)
LOW LEVEL OUTPUT	(Volt)	0.25 (TIP) - 0.6 (MAX) (I_{MAX}=25mA)	0.2 (TIP) - 0.4 (MAX) (I_{MAX}=20mA)	0.2 (TIP) - 0.4 (MAX) (I_{MAX}=20mA)
OUTPUT SIGNAL		Differential	Differential	Differential
MAXIMUM FREQUENCY	(KHz)	100	100	720
POWER SUPPLY VOLTAGE	(Volt)	5 V_{DC} ± 10%	5 V_{DC} ± 10%	5 V_{DC} ± 10%

FEATURES

MODEL		RH 1S0M
BASIC STEP ANGLE		1.8°
BIPOLAR CURRENT	(A)	1.0
UNIPOLAR CURRENT	(A)	
RESISTANCE	(Ohm)	3.6
INDUCTANCE	(mH)	7
BIPOLAR HOLDING TORQUE	(Ncm)	29
UNIPOLAR HOLDING TORQUE	(Ncm)	
ROTOR INERTIA	(Kgm ^{2} x 10 $^{-7}$)	31
THEORETICAL ACCELERATION	(rad x sec.$^{-2}$)	93500
BACK E.M.F.	(V/Krpm)	29
MASS	(Kg)	0.23
PROTECTION DEGREE		IP40
LEADS CODE		V

TORQUE/SPEED CURVE

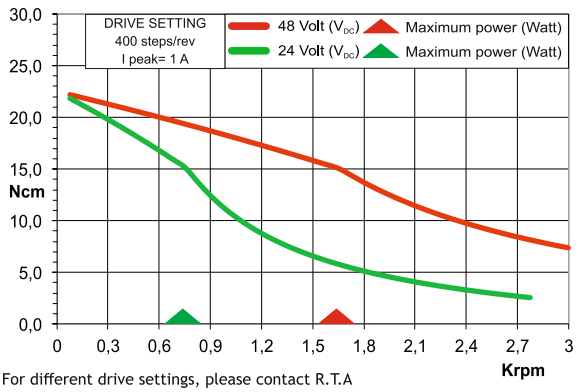

For different drive settings, please contact R.T.A

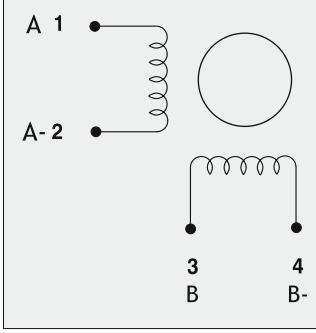

RTA MOTOR CABLE COLORS

DESCRIPTION	
CHANNEL A	GREEN
CHANNEL A-	WHITE
CHANNEL B	YELLOW
CHANNEL B-	BROWN

ENCODER PIN-OUT

DESCRIPTION	04D0 PINS	04E0/0HE0 PINS	R.T.A. CABLE LEADS COLOR
CHANNEL A+	6	6	GREEN
CHANNEL A-	5	5	PURPLE
CHANNEL B+	8	8	BLUE
CHANNEL B-	7	7	BROWN
+ DC (5V)	2	2	RED
GROUND	3	3	BLACK
INDEX+	/	10	ORANGE
INDEX-	/	9	WHITE
R.T.A. CABLE (30 cm)	CVEPA0D0M3	CVEPAZD0M3	

Suggested R.T.A. drive series: BSD, CSD, FLEX-DRIVE

RH 1S1H-0XX0

Dimensions (Unit:mm)

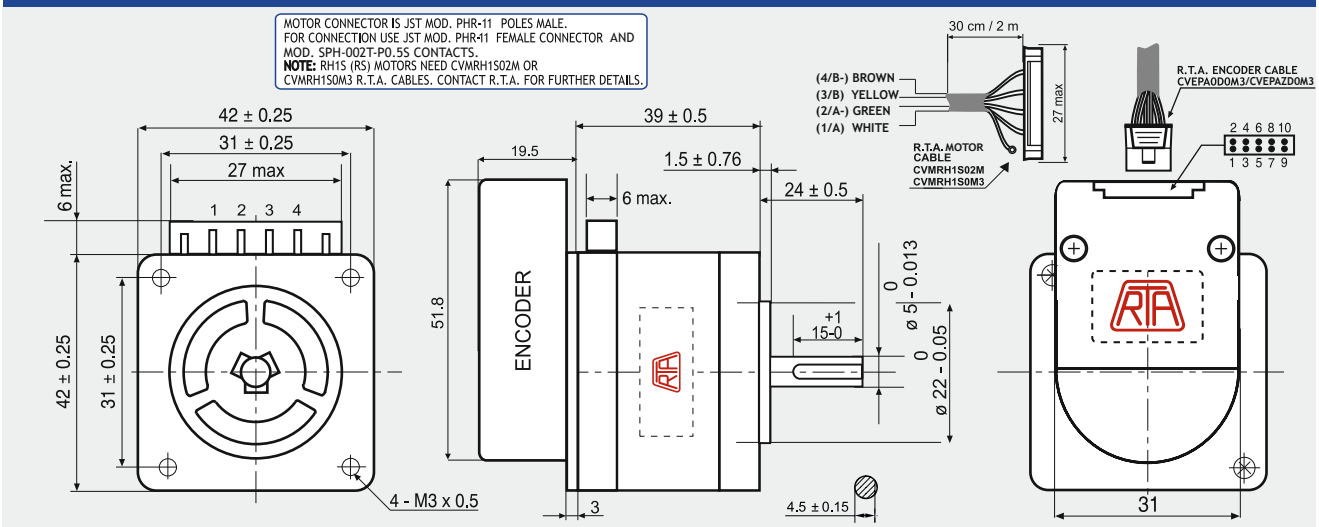

ENCODER OPTIONS:		RH 1S1H-04D0	RH 1S1H-04E0	RH 1S1H-0HE0
RESOLUTION		400 cpr	400 cpr	4000 cpr
INDEX		No	Yes	Yes
CURRENT CONSUMPTION	(mA)	50	50	85
HIGH LEVEL OUTPUT	(Volt)	5 (TIP) - 4.75 (MIN) (I_{MAX}=25mA)	3.4 (TIP) - 2.4 (MIN) (I_{MAX}=20mA)	3.4 (TIP) - 2.4 (MIN) (I_{MAX}=20mA)
LOW LEVEL OUTPUT	(Volt)	0.25 (TIP) - 0.6 (MAX) (I_{MAX}=20mA)	0.2 (TIP) - 0.4 (MAX) (I_{MAX}=20mA)	0.2 (TIP) - 0.4 (MAX) (I_{MAX}=20mA)
OUTPUT SIGNAL		Differential	Differential	Differential
MAXIMUM FREQUENCY	(KHz)	100	100	720
POWER SUPPLY VOLTAGE	(Volt)	5 V_{DC} ±10%	5 V_{DC} ±10%	5 V_{DC} ±10%

FEATURES

MODEL		RH 1S1H
BASIC STEP ANGLE		1.8 ± 0.09°
BIPOLAR CURRENT	(Amp)	2.0
UNIPOLAR CURRENT	(Amp)	
RESISTANCE	(Ohm)	1.1
INDUCTANCE	(mH)	2.4
BIPOLAR HOLDING TORQUE	(Ncm)	43
UNIPOLAR HOLDING TORQUE	(Ncm)	
ROTOR INERTIA	(Kgm ^{2} x 10 $^{-7}$)	46
THEORETICAL ACCELERATION	(rad x sec.$^{-2}$)	93000
BACK E.M.F.	(V/Krpm)	21.5
MASS	(Kg)	0.3
PROTECTION DEGREE		IP40
LEADS CODE		V

TORQUE/SPEED CURVE

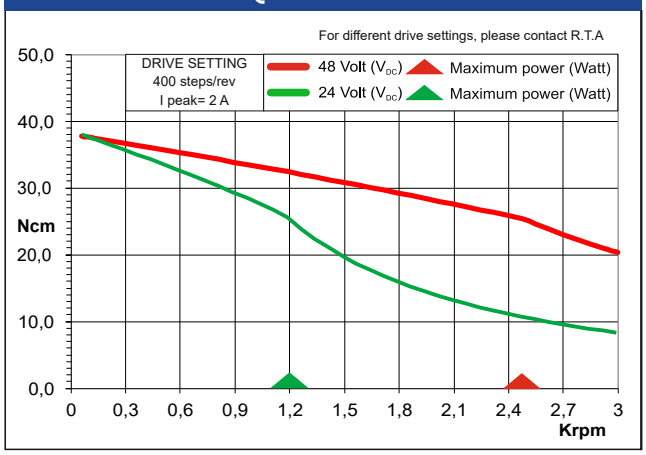

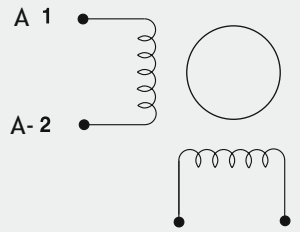

RTA MOTOR CABLE COLORS

DESCRIPTION	
CHANNEL A	GREEN
CHANNEL A-	WHITE
CHANNEL B	YELLOW
CHANNEL B-	BROWN

ENCODER PIN-OUT

DESCRIPTION	04D0 PINS	04E0/0HE0 PINS	R.T.A. CABLE COLOR
CHANNEL A+	6	6 5 8 7 2 3 10 9	GREEN
CHANNEL A-	5		PURPLE
CHANNEL B+	8		BLUE
CHANNEL B-	7		BROWN
+ DC (5V)	2		RED
GROUND	3		BLACK
INDEX+	/		ORANGE
INDEX-	/		WHITE
R.T.A. CABLE (30 cm)	CVEPA0D0M3	CVEPAZD0M3	

Suggested R.T.A. drive series: BSD, CSD, FLEX-DRIVE

RH 1S1M-0XX0

Dimensions (Unit:mm)

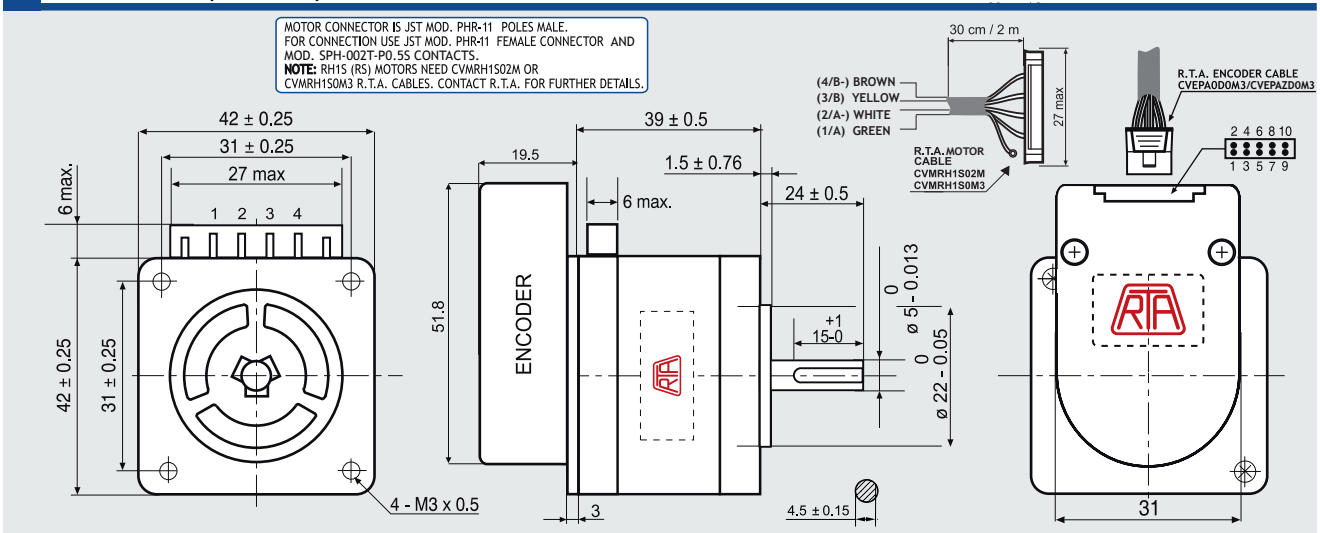

ENCODER OPTIONS:		RH 1S1M-04D0	RH 1S1M-04E0	RH 1S1M-0HE0
RESOLUTION		400 cpr	400 cpr	4000 cpr
INDEX		No	Yes	Yes
CURRENT CONSUMPTION	(mA)	50	50	85
HIGH LEVEL OUTPUT	(Volt)	5 (TIP) - 4.75 (MIN) (I_{MAX}=25mA)	3.4 (TIP) - 2.4 (MIN) (I_{MAX}=20mA)	3.4 (TIP) - 2.4 (MIN) (I_{MAX}=20mA)
LOW LEVEL OUTPUT	(Volt)	0.25 (TIP) - 0.6 (MAX) (I_{MAX}=25mA)	0.2 (TIP) - 0.4 (MAX) (I_{MAX}=20mA)	0.2 (TIP) - 0.4 (MAX) (I_{MAX}=20mA)
OUTPUT SIGNAL		Differential	Differential	Differential
MAXIMUM FREQUENCY	(KHz)	100	100	720
POWER SUPPLY VOLTAGE	(Volt)	5 V_{DC} ±10%	5 V_{DC} ±10%	5 V_{DC} ±10%

FEATURES

MODEL		RH 1S1M
BASIC STEP ANGLE		1.8°
BIPOLAR CURRENT	(A)	1.0
UNIPOLAR CURRENT	(A)	
RESISTANCE	(Ohm)	4.6
INDUCTANCE	(mH)	9.6
BIPOLAR HOLDING TORQUE	(Ncm)	43
UNIPOLAR HOLDING TORQUE	(Ncm)	
ROTOR INERTIA	(Kgm ^{2} x 10 $^{-7}$)	46
THEORETICAL ACCELERATION	(rad x sec.$^{-2}$)	93500
BACK E.M.F.	(V/Krpm)	43
MASS	(Kg)	0.3
PROTECTION DEGREE		IP40
LEADS CODE		V

TORQUE/SPEED CURVE

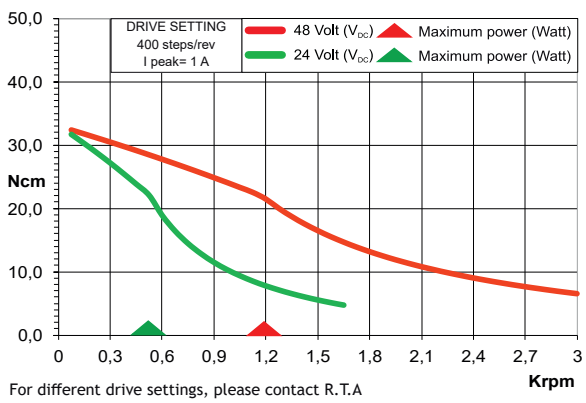

For different drive settings, please contact R.T.A

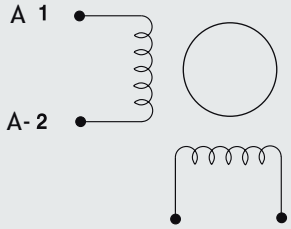

RTA MOTOR CABLE COLORS

DESCRIPTION	
CHANNEL A	GREEN
CHANNEL A-	WHITE
CHANNEL B	YELLOW
CHANNEL B-	BROWN

ENCODER PIN-OUT

DESCRIPTION	04D0 PINS	04E0/0HE0 PINS	R.T.A. CABLE LEADS COLOR
CHANNEL A+	6	6	GREEN
CHANNEL A-	5	5	PURPLE
CHANNEL B+	8	8	BLUE
CHANNEL B-	7	7	BROWN
+ DC (5V)	2	2	RED
GROUND	3	3	BLACK
INDEX+	/	10	ORANGE
INDEX-	/	9	WHITE
R.T.A. CABLE (30 cm)	CVEPA0D0M3	CVEPAZD0M3	

Suggested R.T.A. drive series: BSD, CSD, FLEX-DRIVE

RH 1S2H-0XX0

Dimensions (Unit:mm)

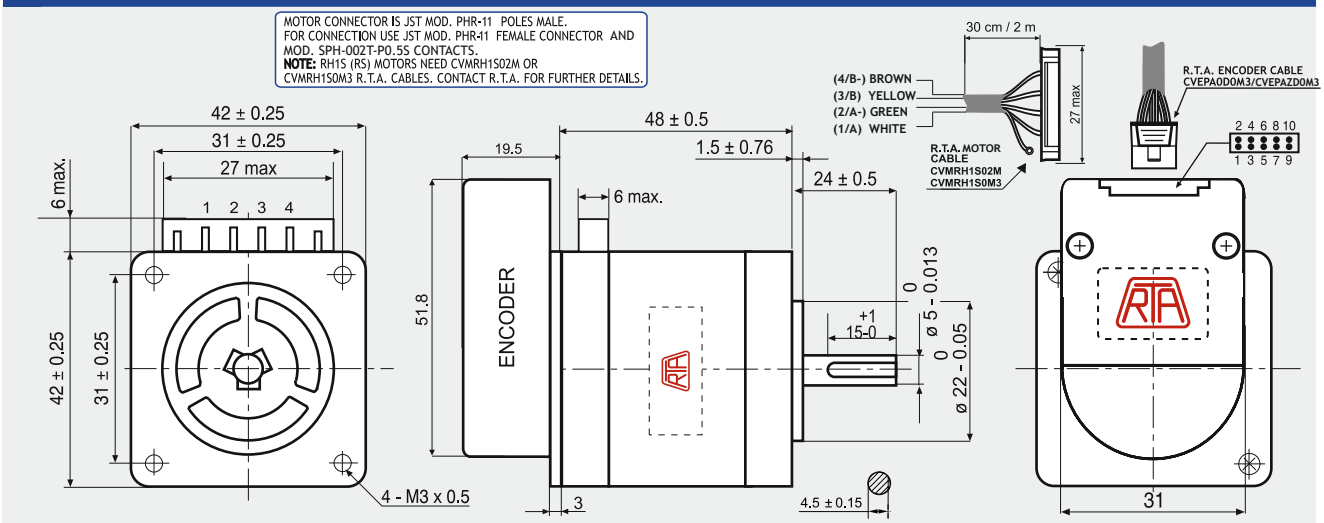

ENCODER OPTIONS:		RH 1S2H-04D0	RH 1S2H-04E0	RH 1S2H-0HE0
RESOLUTION		400 cpr	400 cpr	4000 cpr
INDEX		No	Yes	Yes
CURRENT CONSUMPTION	(mA)	50	50	85
HIGH LEVEL OUTPUT	(Volt)	5 (TIP) - 4.75 (MIN) (I_{MAX}=25mA)	3.4 (TIP) - 2.4 (MIN) (I_{MAX}=20mA)	3.4 (TIP) - 2.4 (MIN) (I_{MAX}=20mA)
LOW LEVEL OUTPUT	(Volt)	0.25 (TIP) - 0.6 (MAX) (I_{MAX}=25mA)	0.2 (TIP) - 0.4 (MAX) (I_{MAX}=20mA)	0.2 (TIP) - 0.4 (MAX) (I_{MAX}=20mA)
OUTPUT SIGNAL		Differential	Differential	Differential
MAXIMUM FREQUENCY	(KHz)	100	100	720
POWER SUPPLY VOLTAGE	(Volt)	5 V_{DC} ±10%	5 V_{DC} ±10%	5 V_{DC} ±10%

FEATURES

MODEL		RH 1S2H
BASIC STEP ANGLE		1.8 ± 0.09°
BIPOLAR CURRENT	(A)	2.3
UNIPOLAR CURRENT	(A)	
RESISTANCE	(Ohm)	0.93
INDUCTANCE	(mH)	2.2
BIPOLAR HOLDING TORQUE	(Ncm)	56
UNIPOLAR HOLDING TORQUE	(Ncm)	
ROTOR INERTIA	(Kgm ^{2} x 10 $^{-7}$)	63
THEORETICAL ACCELERATION	(rad x sec.$^{-2}$)	89000
BACK E.M.F.	(V/Krpm)	24.3
MASS	(Kg)	0.38
PROTECTION DEGREE		IP40
LEADS CODE		V

TORQUE/SPEED CURVE

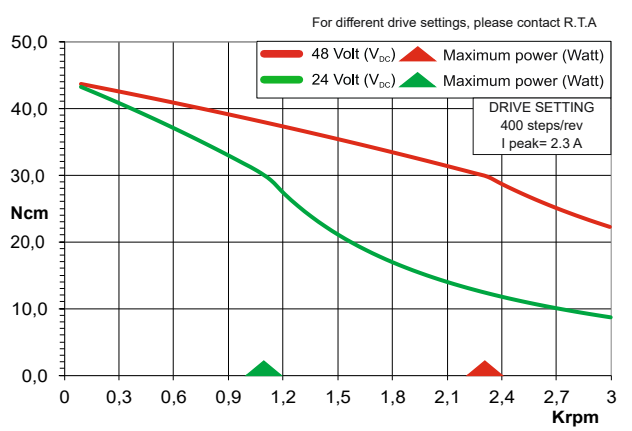

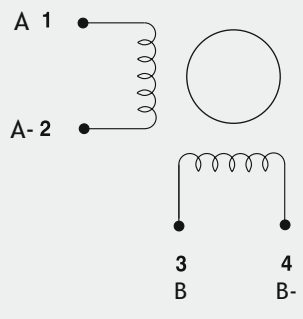

RTA MOTOR CABLE COLORS

DESCRIPTION	
CHANNEL A	GREEN
CHANNEL A-	WHITE
CHANNEL B	YELLOW
CHANNEL B-	BROWN

ENCODER PIN-OUT

DESCRIPTION	04D0 PINS	04E0/0HE0 PINS	R.T.A. CABLE COLOR
CHANNEL A+	6	6 5 8 7 2 3 10 9	GREEN
CHANNEL A-	5		PURPLE
CHANNEL B+	8		BLUE
CHANNEL B-	7		BROWN
+ DC (5V)	2		RED
GROUND	3		BLACK
INDEX+	/		ORANGE
INDEX-	/		WHITE
R.T.A. CABLE (30 cm)	CVEPA0D0M3	CVEPAZD0M3	

Suggested R.T.A. drive series: BSD, CSD, FLEX-DRIVE

RH 1S2M-0XX0

Dimensions (Unit:mm)

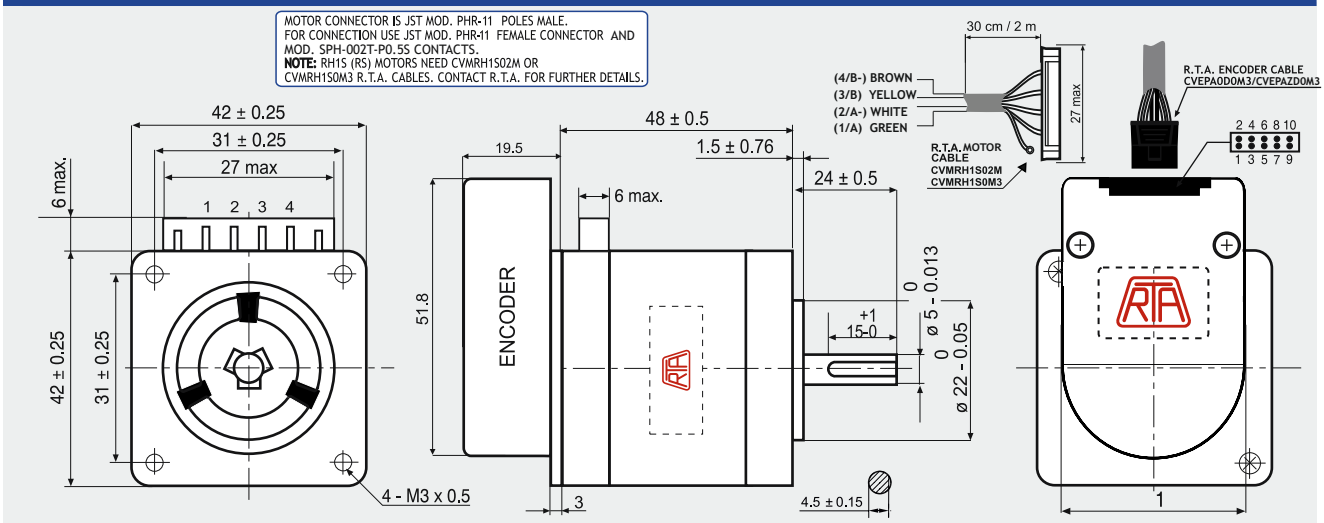

ENCODER OPTIONS:		RH 1S2M-04D0	RH 1S2M-04E0	RH 1S2M-0HE0
RESOLUTION		400 cpr	400 cpr	4000 cpr
INDEX		No	Yes	Yes
CURRENT CONSUMPTION	(mA)	50	50	85
HIGH LEVEL OUTPUT	(Volt)	5 (TIP) - 4.75 (MIN) (I_{MAX}=25mA)	3.4 (TIP) - 2.4 (MIN) (I_{MAX}=20mA)	3.4 (TIP) - 2.4 (MIN) (I_{MAX}=20mA)
LOW LEVEL OUTPUT	(Volt)	0.25 (TIP) - 0.6 (MAX) (I_{MAX}=25mA)	0.2 (TIP) - 0.4 (MAX) (I_{MAX}=20mA)	0.2 (TIP) - 0.4 (MAX) (I_{MAX}=20mA)
OUTPUT SIGNAL		Differential	Differential	Differential
MAXIMUM FREQUENCY	(KHz)	100	100	720
POWER SUPPLY VOLTAGE	(Volt)	5 V_{DC} ±10%	5 V_{DC} ±10%	5 V_{DC} ±10%

FEATURES

MODEL		RH 1S2M
BASIC STEP ANGLE		1.8°
BIPOLAR CURRENT	(A)	1.0
UNIPOLAR CURRENT	(A)	
RESISTANCE	(Ohm)	5.3
INDUCTANCE	(mH)	12.5
BIPOLAR HOLDING TORQUE	(Ncm)	56
UNIPOLAR HOLDING TORQUE	(Ncm)	
ROTOR INERTIA	(Kgm ^{2} x 10 $^{-7}$)	63
THEORETICAL ACCELERATION	(rad x sec.$^{-2}$)	88900
BACK E.M.F.	(V/Krpm)	56
MASS	(Kg)	0.38
PROTECTION DEGREE		IP40
LEADS CODE		V

TORQUE/SPEED CURVE

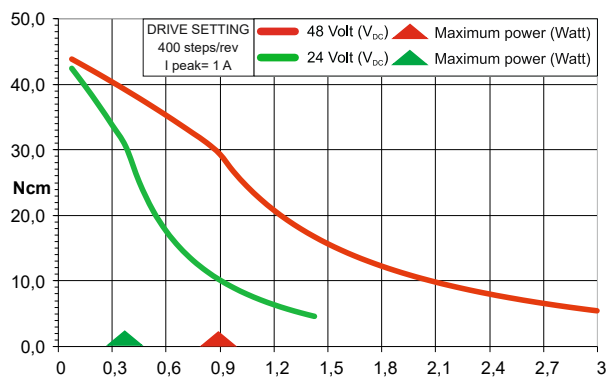

For different drive settings please contact R.T.A.

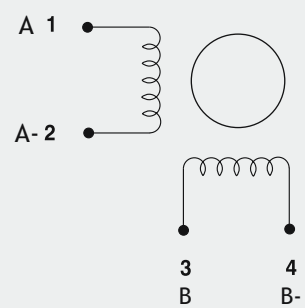

RTA MOTOR CABLE COLORS

DESCRIPTION	
CHANNEL A	GREEN
CHANNEL A-	WHITE
CHANNEL B	YELLOW
CHANNEL B-	BROWN

ENCODER PIN-OUT

DESCRIPTION	04D0 PINS	04E0/0HE0 PINS	R.T.A. CABLE LEADS COLOR
CHANNEL A+	6	6	GREEN
CHANNEL A-	5	5	PURPLE
CHANNEL B+	8	8	BLUE
CHANNEL B-	7	7	BROWN
+ DC (5V)	2	2	RED
GROUND	3	3	BLACK
INDEX+	/	10	ORANGE
INDEX-	/	9	WHITE
R.T.A. CABLE (30 cm)	CVEPA0D0M3	CVEPAZD0M3	

Suggested R.T.A. drive series: BSD, CSD, FLEX-DRIVE

RH 1S3H-0XX0

Dimensions (Unit:mm)

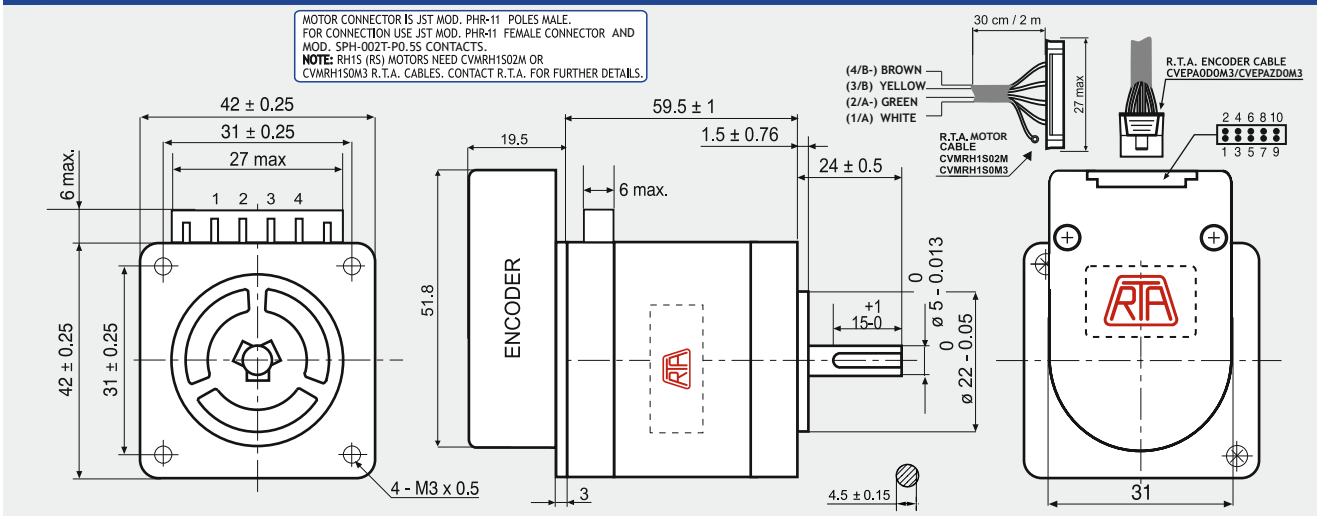

ENCODER OPTIONS:		RH 1S3H-04D0	RH 1S3H-04E0	RH 1S3H-0HE0
RESOLUTION		400 cpr	400 cpr	4000 cpr
INDEX		No	Yes	Yes
CURRENT CONSUMPTION	(mA)	50	50	85
HIGH LEVEL OUTPUT	(Volt)	5 (TIP) - 4.75 (MIN) (I_{MAX}=25mA)	3.4 (TIP) - 2.4 (MIN) (I_{MAX}=20mA)	3.4 (TIP) - 2.4 (MIN) (I_{MAX}=20mA)
LOW LEVEL OUTPUT	(Volt)	0.25 (TIP) - 0.6 (MAX) (I_{MAX}=25mA)	0.2 (TIP) - 0.4 (MAX) (I_{MAX}=20mA)	0.2 (TIP) - 0.4 (MAX) (I_{MAX}=20mA)
OUTPUT SIGNAL		Differential	Differential	Differential
MAXIMUM FREQUENCY	(KHz)	100	100	720
POWER SUPPLY VOLTAGE	(Volt)	5 V_{DC} ±10%	5 V_{DC} ±10%	5 V_{DC} ±10%

FEATURES

MODEL		RH 1S3H
BASIC STEP ANGLE		1.8 ± 0.09°
BIPOLAR CURRENT	(Amp)	2.3
UNIPOLAR CURRENT	(Amp)	
RESISTANCE	(Ohm)	1.2
INDUCTANCE	(mH)	3.0
BIPOLAR HOLDING TORQUE	(Ncm)	80
UNIPOLAR HOLDING TORQUE	(Ncm)	
ROTOR INERTIA	(Kgm ^{2} x 10 $^{-7}$)	94
THEORETICAL ACCELERATION	(rad x sec.$^{-2}$)	85100
BACK E.M.F.	(V/Krpm)	34.7
MASS	(Kg)	0.51
PROTECTION DEGREE		IP40
LEADS CODE		V

TORQUE/SPEED CURVE

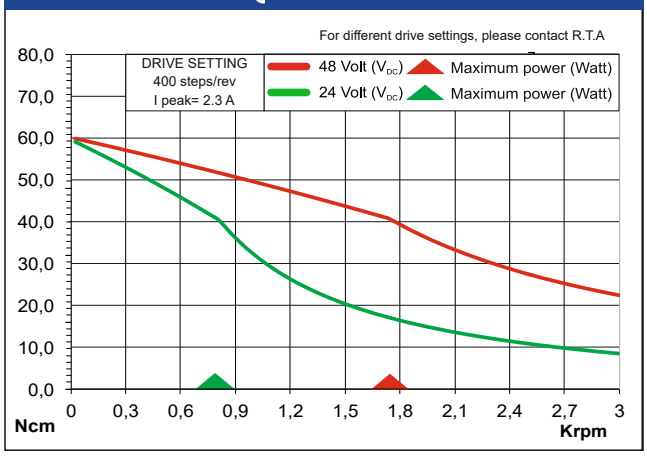

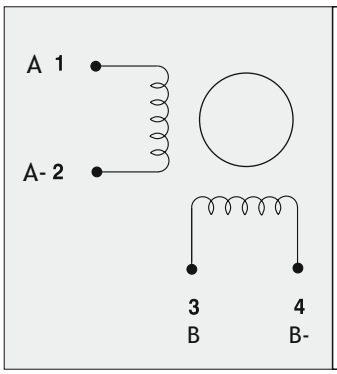

RTA MOTOR CABLE COLORS

DESCRIPTION	
CHANNEL A	GREEN
CHANNEL A-	WHITE
CHANNEL B	YELLOW
CHANNEL B-	BROWN

ENCODER PIN-OUT

DESCRIPTION	04D0 PINS	04E0/0HE0 PINS	R.T.A. CABLE LEADS COLOR
CHANNEL A+	6	6	GREEN
CHANNEL A-	5	5	PURPLE
CHANNEL B+	8	8	BLUE
CHANNEL B-	7	7	BROWN
+ DC (5V	2	2	RED
GROUND	3	3	BLACK
INDEX+	/	10	ORANGE
INDEX-	/	9	WHITE
R.T.A. CABLE (30 cm)	CVEPA0D0M3	CVEPAZD0M3	

Suggested R.T.A. drive series: BSD, CSD, FLEX-DRIVE

RH 1S3M-0XX0

Dimensions (Unit:mm)

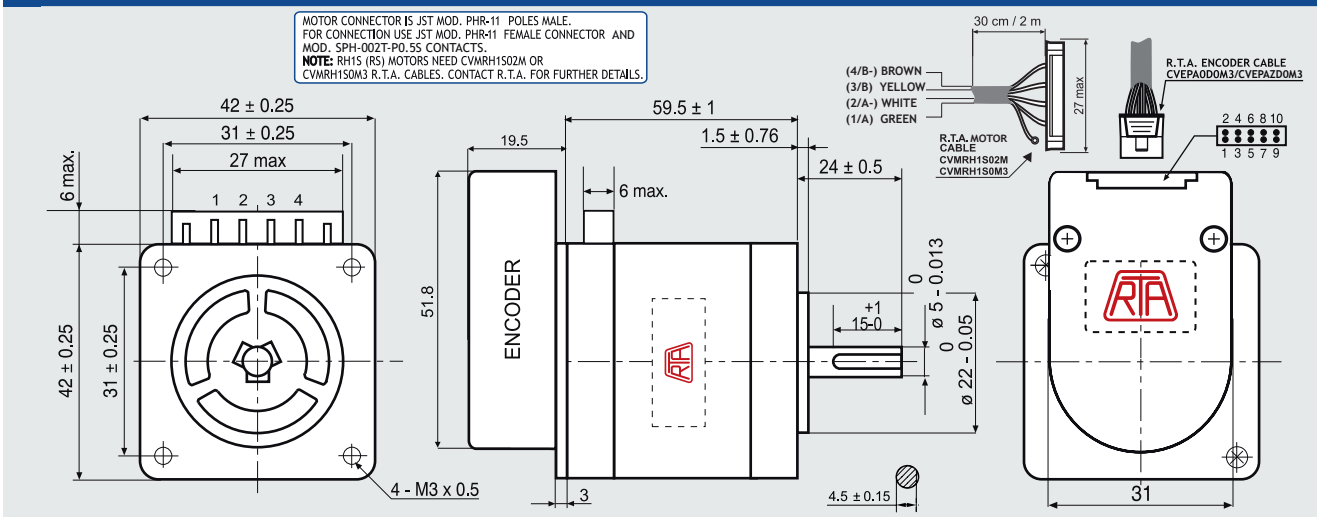

ENCODER OPTIONS:		RH 1S3M-04D0	RH 1S3M-04E0	RH 1S3M-0HE0
RESOLUTION		400 cpr	400 cpr	4000 cpr
INDEX		No	Yes	Yes
CURRENT CONSUMPTION	(mA)	50	50	85
HIGH LEVEL OUTPUT	(Volt)	5 (TIP) - 4.75 (MIN) (I_{MAX}=25mA)	3.4 (TIP) - 2.4 (MIN) (I_{MAX}=20mA)	3.4 (TIP) - 2.4 (MIN) (I_{MAX}=20mA)
LOW LEVEL OUTPUT	(Volt)	0.25 (TIP) - 0.6 (MAX) (I_{MAX}=25mA)	0.2 (TIP) - 0.4 (MAX) (I_{MAX}=20mA)	0.2 (TIP) - 0.4 (MAX) (I_{MAX}=20mA)
OUTPUT SIGNAL		Differential	Differential	Differential
MAXIMUM FREQUENCY	(KHz)	100	100	720
POWER SUPPLY VOLTAGE	(Volt)	5 V_{DC} ±10%	5 V_{DC} ±10%	5 V_{DC} ±10%

FEATURES

MODEL		RH 1S3M
BASIC STEP ANGLE		1.8°
BIPOLAR CURRENT	(A)	1.0
UNIPOLAR CURRENT	(A)	
RESISTANCE	(Ohm)	6.5
INDUCTANCE	(mH)	16
BIPOLAR HOLDING TORQUE	(Ncm)	80
UNIPOLAR HOLDING TORQUE	(Ncm)	
ROTOR INERTIA	(Kgm ^{2} x 10 $^{-7}$)	94
THEORETICAL ACCELERATION	(rad x sec.$^{-2}$)	85100
BACK E.M.F.	(V/Krpm)	80
MASS	(Kg)	0.51
PROTECTION DEGREE		IP40
LEADS CODE		V

TORQUE/SPEED CURVE

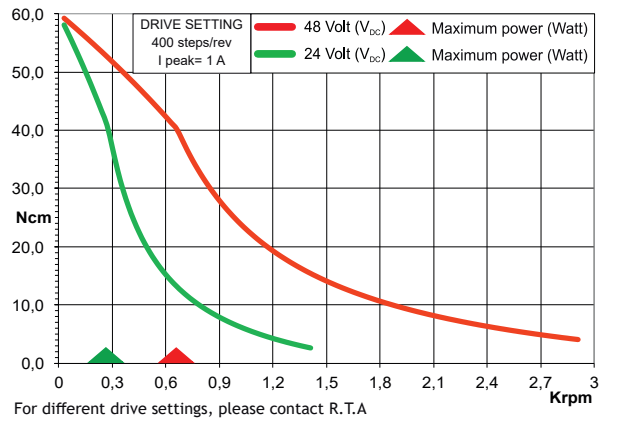

For different drive settings, please contact R.T.A

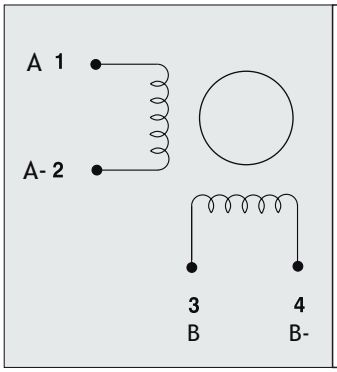

RTA MOTOR CABLE COLORS

DESCRIPTION	
CHANNEL A	GREEN
CHANNEL A-	WHITE
CHANNEL B	YELLOW
CHANNEL B-	BROWN

ENCODER PIN-OUT

DESCRIPTION	04D0 PINS	04E0/0HE0 PINS	R.T.A. CABLE LEADS COLOR
CHANNEL A+	6	6	GREEN
CHANNEL A-	5	5	PURPLE
CHANNEL B+	8	8	BLUE
CHANNEL B-	7	7	BROWN
+ DC (5V)	2	2	RED
GROUND	3	3	BLACK
INDEX+	/	10	ORANGE
INDEX-	/	9	WHITE
R.T.A. CABLE (30 cm)	CVEPA0D0M3	CVEPAZD0M3	

Suggested R.T.A. drive series: BSD, CSD, FLEX-DRIVE

RH 2S1M-0XX0

Dimensions (Unit:mm)

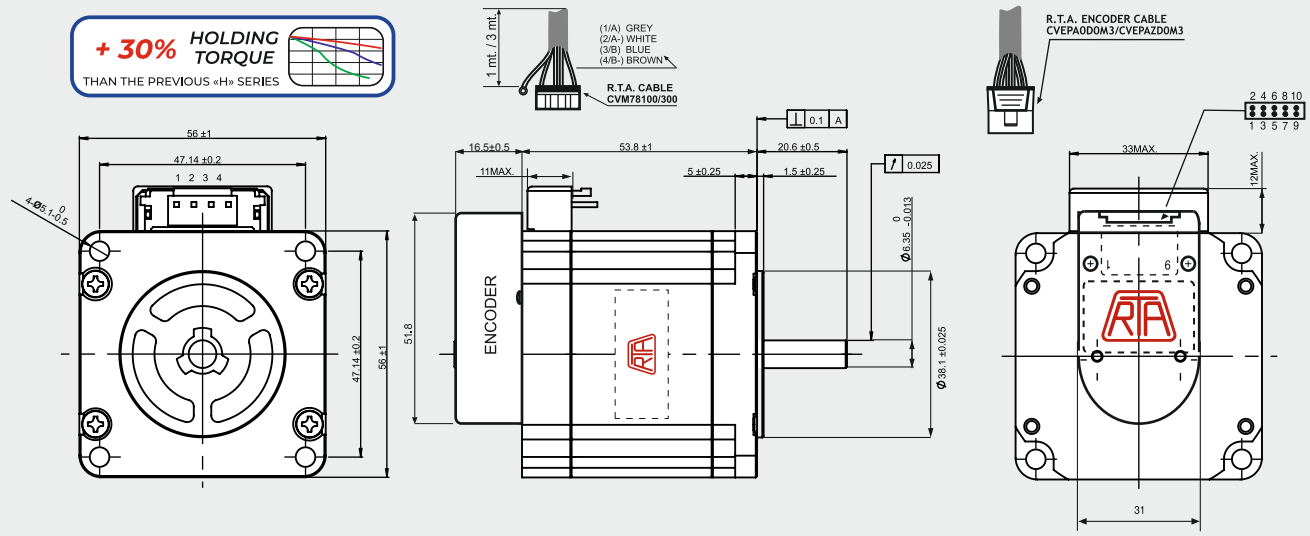

ENCODER OPTIONS:		RH 2S1M-04D0	RH 2S1M-04E0	RH 2S1M-0HE0
RESOLUTION		400 cpr	400 cpr	4000 cpr
INDEX		No	Yes	Yes
CURRENT CONSUMPTION	(mA)	50	50	85
HIGH LEVEL OUTPUT	(Volt)	5 (TIP) - 4.75 (MIN) (I_{MAX}=25mA)	3.4 (TIP) - 2.4 (MIN) (I_{MAX}=20mA)	3.4 (TIP) - 2.4 (MIN) (I_{MAX}=20mA)
LOW LEVEL OUTPUT	(Volt)	0.25 (TIP) - 0.6 (MAX) (I_{MAX}=25mA)	0.2 (TIP) - 0.4 (MAX) (I_{MAX}=20mA)	0.2 (TIP) - 0.4 (MAX) (I_{MAX}=20mA)
OUTPUT SIGNAL		Differential	Differential	Differential
MAXIMUM FREQUENCY	(KHz)	100	100	720
POWER SUPPLY VOLTAGE	(Volt)	5 V_{DC} ± 10%	5 V_{DC} ± 10%	5 V_{DC} ± 10%

ENCODER NEEDS CVEPA0D0M3 OR CVEPAZD0M3 R.T.A. CABLE. CONTACT R.T.A. FOR FURTHER DETAILS

FEATURES

MODEL		RH 2S1M-0XX0
BASIC STEP ANGLE		1.8 ± 0.09°
BIPOLAR CURRENT	(Amp)	4.0
UNIPOLAR CURRENT	(Amp)	
RESISTANCE	(Ohm)	0.37
INDUCTANCE	(mH)	1.5
BIPOLAR HOLDING TORQUE	(Ncm)	140
ROTOR INERTIA	(Kgm ^{2} x 10 $^{-7}$)	280
THEORETICAL ACCELERATION	(rad x sec.$^{-2}$)	50000
BACK E.M.F.	(V/Krpm)	35
MASS	(Kg)	0 69
INTERNATIONAL STANDARDS		UL, CSA
PROTECTION DEGREE		IP40
LEADS CODE		V

TORQUE SPEED/CURVE

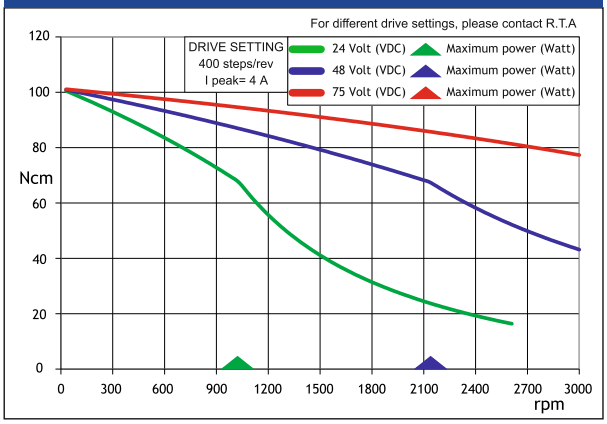

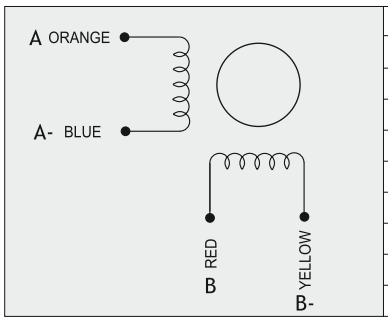

ENCODER PIN-OUT

DESCRIPTION	04D0 PINS	04E0 PINS	0HE0 PINS	R.T.A. CABLE LEADS COLOR
CHANNEL A+	6	6	6	GREEN
CHANNEL A-	5	5	5	PURPLE
CHANNEL B+	8	8	8	BLUE
CHANNEL B-	7	7	7	BROWN
+ DC (5V)	2	2	2	RED
GROUND	3	3	3	BLACK
INDEX+	/	10	10	ORANGE
INDEX-	/	9	9	WHITE

Suggested R.T.A. drive series: BSD, CSD, FLEX-DRIVE, NDC

RH 2S2M-0XX0

Dimensions (Unit:mm)

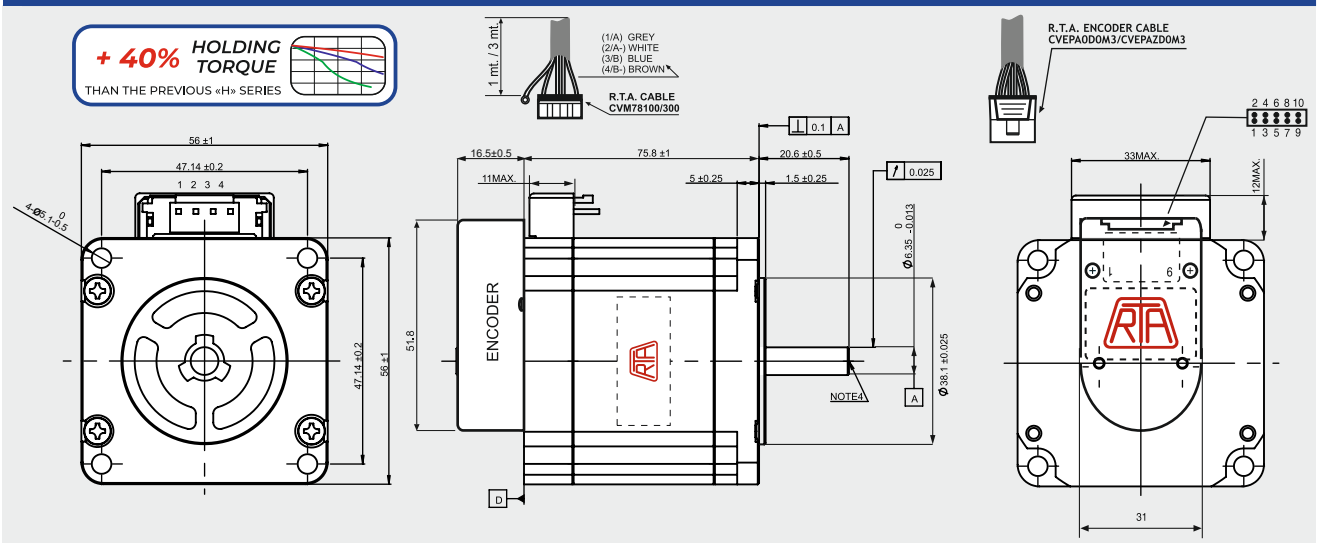

ENCODER OPTIONS:		RH 2S2M-04D0	RH 2S2M-04E0	RH 2S2M-0HE0
RESOLUTION		400 cpr	400 cpr	4000 cpr
INDEX		No	Yes	Yes
CURRENT CONSUMPTION	(mA)	50	50	85
HIGH LEVEL OUTPUT	(Volt)	5 (TIP) - 4.75 (MIN) (I_{MAX}=25mA)	3.4 (TIP) - 2.4 (MIN) (I_{MAX}=20mA)	3.4 (TIP) - 2.4 (MIN) (I_{MAX}=20mA)
LOW LEVEL OUTPUT	(Volt)	0.25 (TIP) - 0.6 (MAX) (I_{MAX}=25mA)	0.2 (TIP) - 0.4 (MAX) (I_{MAX}=20mA)	0.2 (TIP) - 0.4 (MAX) (I_{MAX}=20mA)
OUTPUT SIGNAL		Differential	Differential	Differential
MAXIMUM FREQUENCY	(KHz)	100	100	720
POWER SUPPLY VOLTAGE	(Volt)	5 V_{DC} ± 10%	5 V_{DC} ± 10%	5 V_{DC} ± 10%

ENCODER NEEDS CVEPA0D0M3 OR CVEPAZD0M3 R.T.A. CABLE. CONTACT R.T.A. FOR FURTHER DETAILS

FEATURES

MODEL		RH 2S2M-0XX0
BASIC STEP ANGLE		1.8 ± 0.09°
BIPOLAR CURRENT	(Amp)	4.0
UNIPOLAR CURRENT	(Amp)	
RESISTANCE	(Ohm)	0.52
INDUCTANCE	(mH)	2.4
BIPOLAR HOLDING TORQUE	(Ncm)	235
ROTOR INERTIA	(Kgm ^{2} x 10 $^{-7}$)	500
THEORETICAL ACCELERATION	(rad x sec.$^{-2}$)	47000
BACK E.M.F.	(V/Krpm)	58.7
MASS	(Kg)	1.1
INTERNATIONAL STANDARDS		UL, CSA
PROTECTION DEGREE		IP40
LEADS CODE		V

TORQUE SPEED/CURVE

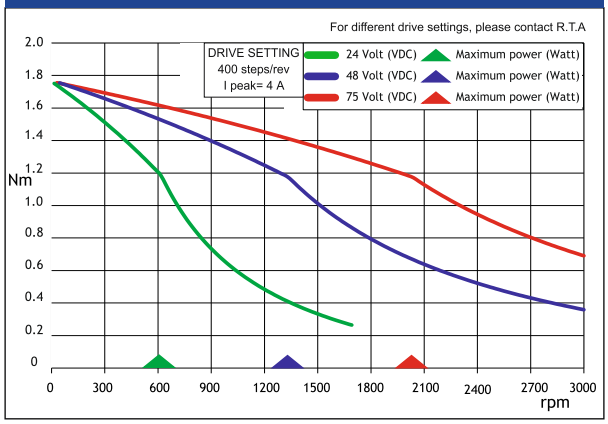

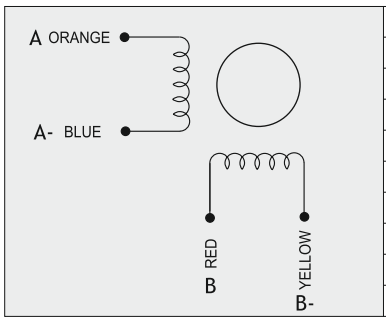

ENCODER PIN-OUT

DESCRIPTION	04D0 PINS	04E0 PINS	0HE0 PINS	R.T.A. CABLE LEADS COLOR
CHANNEL A+	6	6	6	GREEN
CHANNEL A-	5	5	5	PURPLE
CHANNEL B+	8	8	8	BLUE
CHANNEL B-	7	7	7	BROWN
+ DC (5V)	2	2	2	RED
GROUND	3	3	3	BLACK
INDEX+	/	10	10	ORANGE
INDEX-	/	9	9	WHITE

Suggested R.T.A. drive series: BSD, CSD, FLEX-DRIVE, NDC

RM 3T1M-00HT

NEW!

BATTERY-LESS ABSOLUTE ENCODER

Dimensions (Unit:mm)

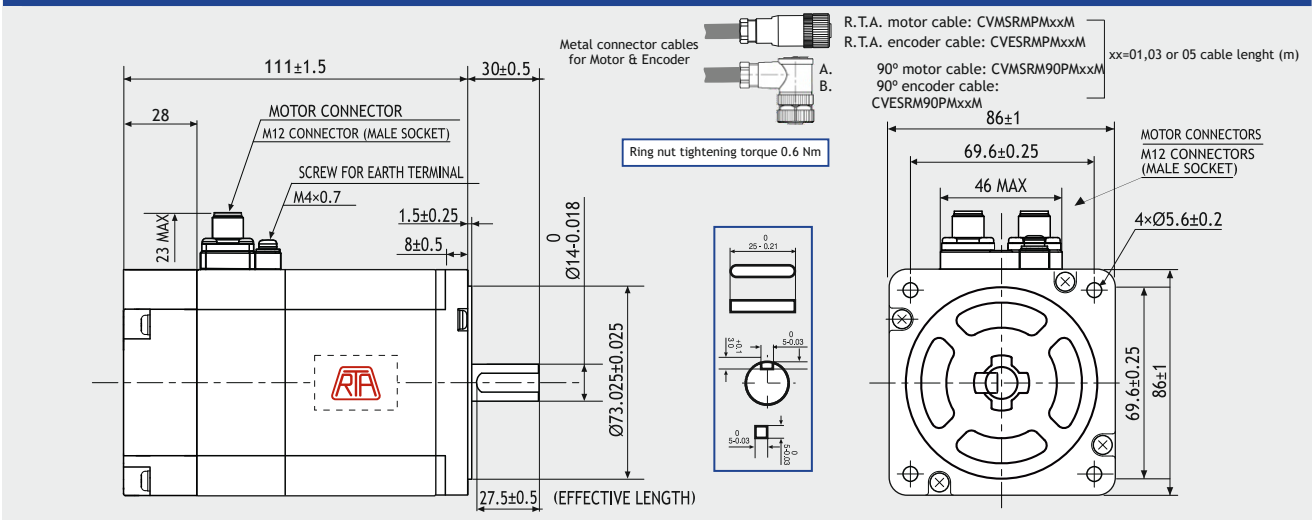

ENCODER FEATURES:

ENCODER MOTOR		RM 3T3M-00HT
RESOLUTION		DRIVE RELATED
MULTI-TURN RESOLUTION		2^{16}
CURRENT CONSUMPTION	(mA)	60
HIGH LEVEL OUTPUT	(Volt)	**5(TIP) - 4.75 (MIN)**
LOW LEVEL OUTPUT	(Volt)	0.25 (TIP) - 0.6 (MAX)
OUTPUT SIGNAL		BiSS-C/SSI
POWER SUPPLY VOLTAGE	(Volt)	5 V_{DC} ± 10%

ENCODER CONNECTOR PIN-OUT

DESCRIPTION	X-PLUS AS4 C4 CON. PINS	M12 MOTOR PINS	RTA CABLE LEADS COLOR
CLOCK +	47	1	BLUE
CLOCK -	46	2	BROWN
DATA +	45	3	GREEN
DATA -	44	4	PURPLE
GND	48	5	BLACK
RESET	42	6	WHITE
NC	43	7	ORANGE
+5 VDC	41	8	RED

MOTOR FEATURES:

MODEL		RM 3T1M
BASIC STEP ANGLE		1.8 ± 0.09°
BIPOLAR CURRENT	(A)	4
RESISTANCE	(Ohm)	0.56
INDUCTANCE	(mH)	3.7
BIPOLAR HOLDING TORQUE	(Ncm)	360
ROTOR INERTIA	(Kgm ^{2} x 10 $^{-7}$)	1480
THEORETICAL ACCELERATION	(rad x sec.$^{-2}$)	2430
BACK E.M.F.	(V/Krpm)	0 90
MASS	(Kg)	1.95
INTERNATIONAL STANDARDS		UL, CSA, CE, RoHS
INSULATION VOLTAGE	(V)	250 V_{AC} (350 V_{DC})
PROTECTION DEGREE - INSULATION CLASS		IP 54 - CLASS F
LEADS CODE		V

TORQUE/SPEED CURVE

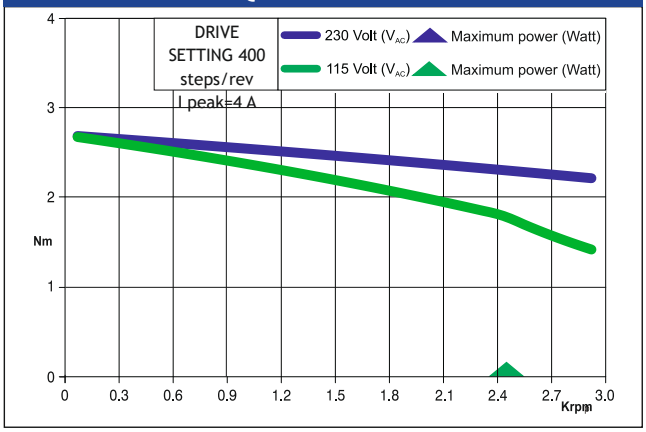

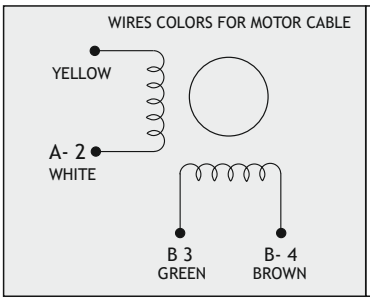

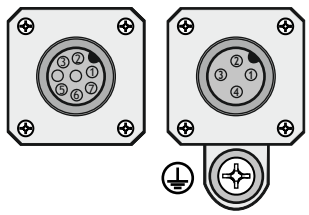

MOTOR CONNECTOR HIGH SIDE VIEW

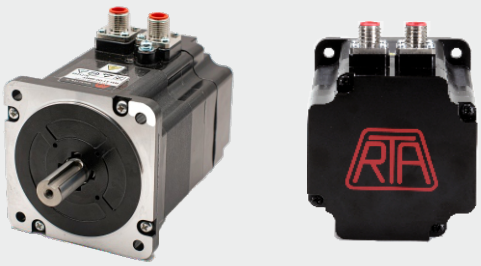

Only for R.T.A. 230 Vac X-PLUS AS4 drive

RM 3T1M-0XX0

Dimensions (Unit:mm)

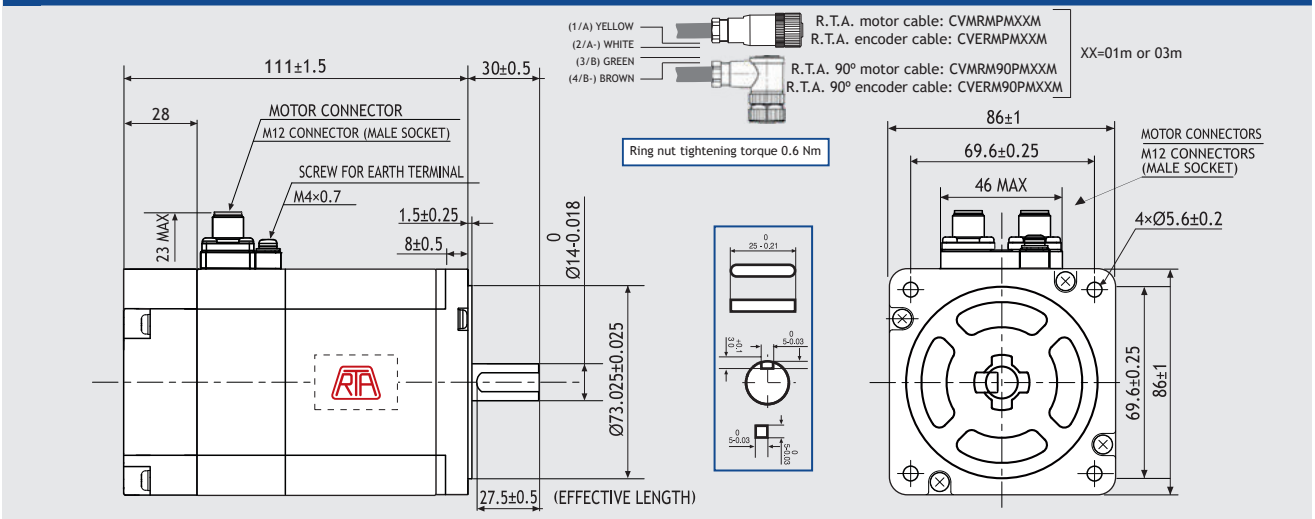

ENCODER OPTIONS:		RM 3T1M-04D0	RM 3T1M-04E0	RM 3T1M-0HE0
RESOLUTION		400 cpr	400 cpr	4000 cpr
INDEX		No	Yes	Yes
CURRENT CONSUMPTION	(mA)	50	50	85
HIGH LEVEL OUTPUT	(Volt)	5 (TIP) - 4.75 (MIN) (I_{MAX}=25mA)	3.4 (TIP) - 2.4 (MIN) (I_{MAX}=20mA)	3.4 (TIP) - 2.4 (MIN) (I_{MAX}=20mA)
LOW LEVEL OUTPUT	(Volt)	0.25 (TIP) - 0.6 (MAX) (I_{MAX}=25mA)	0.2 (TIP) - 0.4 (MAX) (I_{MAX}=20mA)	0.2 (TIP) - 0.4 (MAX) (I_{MAX}=20mA)
OUTPUT SIGNAL		Differential	Differential	Differential
MAXIMUM FREQUENCY	(KHz)	100	100	720
POWER SUPPLY VOLTAGE	(Volt)	5 V_{DC} ± 10%	5 V_{DC} ± 10%	5 V_{DC} ± 10%

FEATURES

MODEL		RM 3T1M
BASIC STEP ANGLE		1.8 ± 0.09°
BIPOLAR CURRENT	(A)	4
RESISTANCE	(Ohm)	0.56
INDUCTANCE	(mH)	3.7
BIPOLAR HOLDING TORQUE	(Ncm)	360
ROTOR INERTIA	(Kgm ^{2} x 10 $^{-7}$)	1480
THEORETICAL ACCELERATION	(rad x sec.$^{-2}$)	24300
BACK E.M.F.	(V/Krpm)	90
MASS	(Kg)	1.95
INTERNATIONAL STANDARDS		UL, CSA, CE, RoHS
INSULATION VOLTAGE	(V)	250 V_{AC} (350 V_{DC})
PROTECTION DEGREE - INSULATION CLASS		IP 54 - CLASS F
LEADS CODE		V

TORQUE/SPEED CURVE

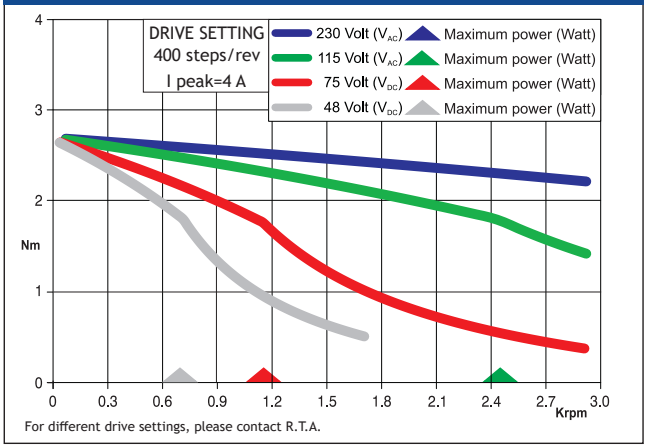

For different drive settings, please contact R.T.A.

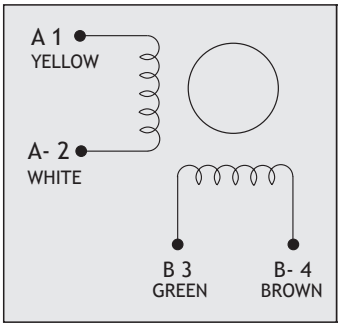

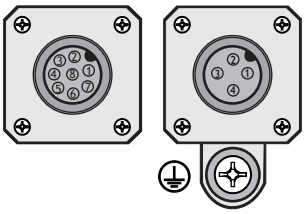

MOTOR CONNECTOR HIGH SIDE VIEW

ENCODER CONNECTOR PIN-OUT

DESCRIPTION	04D0 PINS	04E0/0HE0 PINS	R.T.A. CABLE LEADS COLOR
CHANNEL B+	3	3	GREEN
CHANNEL B-	4	4	PURPLE
CHANNEL A+	1	1	BLUE
CHANNEL A-	2	2	BROWN
+ DC (5V)	8	8	RED
GROUND	5	5	BLACK
INDEX+	/	7	ORANGE
INDEX-	/	6	WHITE

R.T.A. CABLE CVMRMPMxxM

Suggested R.T.A. drive series: 230 Vac X-PLUS

RM 3T2M-00HT

NEW!

BATTERY-LESS
ABSOLUTE ENCODER

Dimensions (Unit:mm)

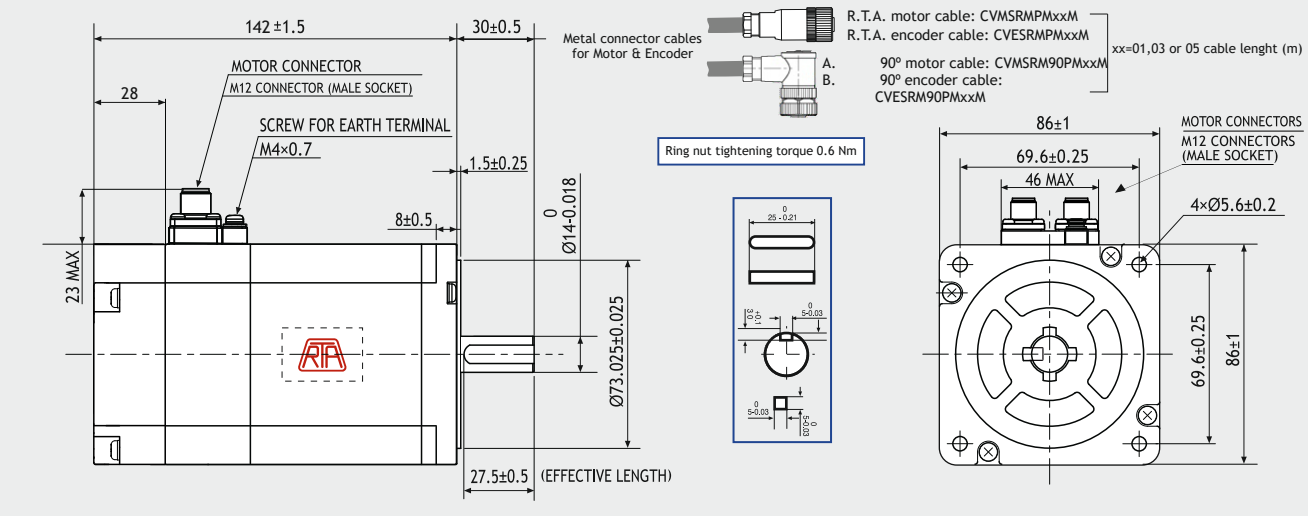

ENCODER FEATURES:

ENCODER MOTOR		RM 3T2M-00HT
RESOLUTION		DRIVE RELATED
MULTI-TURN RESOLUTION		2^{16}
CURRENT CONSUMPTION	(mA)	60
HIGH LEVEL OUTPUT	(Volt)	**5(TIP) - 4.75 (MIN)**
LOW LEVEL OUTPUT	(Volt)	0.25 (TIP) - 0.6 (MAX)
OUTPUT SIGNAL		BiSS-C/SSI
POWER SUPPLY VOLTAGE	(Volt)	5 V_{DC} ± 10%

ENCODER CONNECTOR PIN-OUT

DESCRIPTION	X-PLUS AS4 C4 CON. PINS	M12 MOTOR PINS	RTA CABLE LEADS COLOR
CLOCK +	47	1	BLUE
CLOCK -	46	2	BROWN
DATA +	45	3	GREEN
DATA -	44	4	PURPLE
GND	48	5	BLACK
RESET	42	6	WHITE
NC	43	7	ORANGE
+5 VDC	41	8	RED

MOTOR FEATURES:

MODEL		RM 3T2M
BASIC STEP ANGLE		1.8 ± 0.09°
BIPOLAR CURRENT	(A)	4
RESISTANCE	(Ohm)	0.83
INDUCTANCE	(mH)	6.4
BIPOLAR HOLDING TORQUE	(Ncm)	700
ROTOR INERTIA	(Kgm ^{2} x 10 $^{-7}$)	3000
THEORETICAL ACCELERATION	(rad x sec.$^{-2}$)	23330
BACK E.M.F.	(V/Krpm)	175
MASS	(Kg)	3.1
INTERNATIONAL STANDARDS		UL, CSA, CE, RoHS
INSULATION VOLTAGE	(V)	250 V_{AC} (350 V_{DC})
PROTECTION DEGREE - INSULATION CLASS		IP 54 - CLASS F
LEADS CODE		V

TORQUE/SPEED CURVE

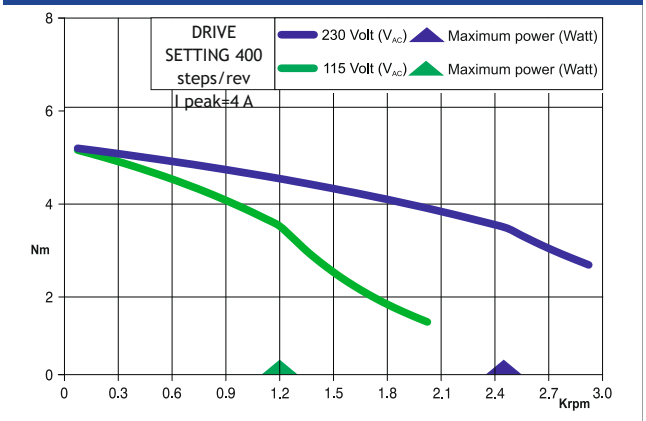

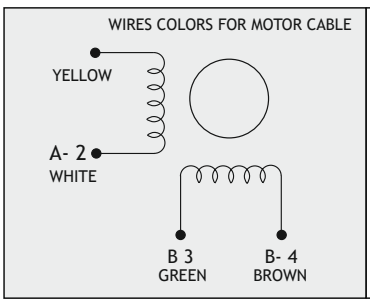

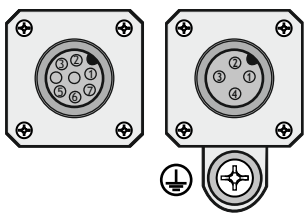

MOTOR CONNECTOR HIGH SIDE VIEW

Only for R.T.A. 230 Vac X-PLUS AS4 drive

R.T.A. s.r.l. PAVIA (ITALY) SANYO DENKI CO.,Ltd (JAPAN)

RM 3T2M-0XX0

Dimensions (Unit:mm)

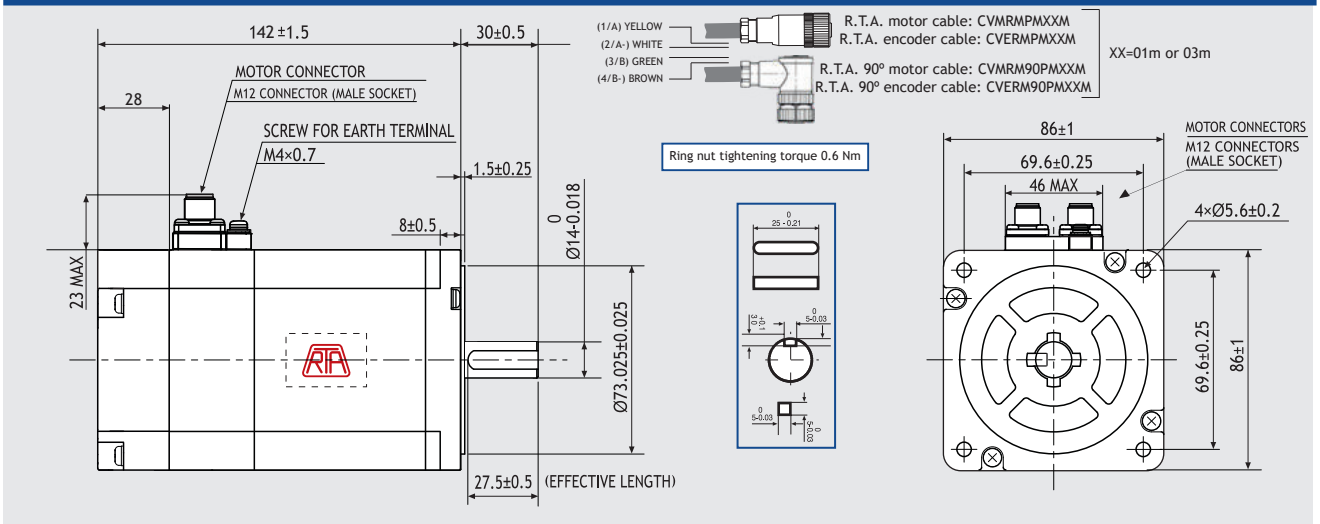

ENCODER OPTIONS:		RM 3T2M-04D0	RM 3T2M-04E0	RM 3T2M-0HE0
RESOLUTION		400 cpr	400 cpr	4000 cpr
INDEX		No	Yes	Yes
CURRENT CONSUMPTION	(mA)	50	50	85
HIGH LEVEL OUTPUT	(Volt)	5 (TIP) - 4.75 (MIN) (I_{MAX}=25mA)	3.4 (TIP) - 2.4 (MIN) (I_{MAX}=20mA)	3.4 (TIP) - 2.4 (MIN) (I_{MAX}=20mA)
LOW LEVEL OUTPUT	(Volt)	0.25 (TIP) - 0.6 (MAX) (I_{MAX}=25mA)	0.2 (TIP) - 0.4 (MAX) (I_{MAX}=20mA)	0.2 (TIP) - 0.4 (MAX) (I_{MAX}=20mA)
OUTPUT SIGNAL		Differential	Differential	Differential
MAXIMUM FREQUENCY	(KHz)	100	100	720
POWER SUPPLY VOLTAGE	(Volt)	5 V_{DC} ± 10%	5 V_{DC} ± 10%	5 V_{DC} ± 10%

FEATURES

MODEL		RM 3T2M
BASIC STEP ANGLE		1.8 ± 0.09°
BIPOLAR CURRENT	(A)	4
RESISTANCE	(Ohm)	0.83
INDUCTANCE	(mH)	6.4
BIPOLAR HOLDING TORQUE	(Ncm)	700
ROTOR INERTIA	(Kgm ^{2} x 10 $^{-7}$)	3000
THEORETICAL ACCELERATION	(rad x sec.$^{-2}$)	23330
BACK E.M.F.	(V/Krpm)	175
MASS	(Kg)	3.1
INTERNATIONAL STANDARDS		UL, CSA, CE, RoHS
INSULATION VOLTAGE	(V)	250 V_{AC} (350 V_{DC})
PROTECTION DEGREE - INSULATION CLASS		IP 54 - CLASS F
LEADS CODE		V

TORQUE/SPEED CURVE

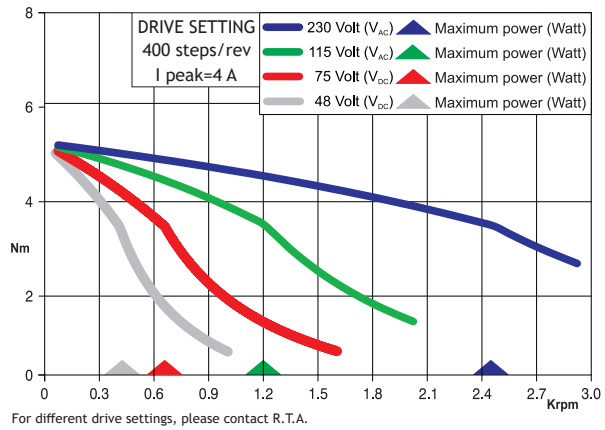

For different drive settings, please contact R.T.A.

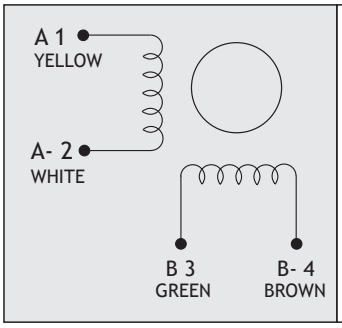

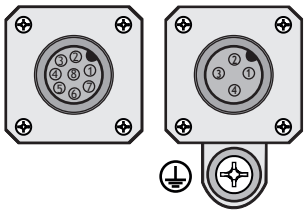

MOTOR CONNECTOR HIGH SIDE VIEW

ENCODER CONNECTOR PIN-OUT

DESCRIPTION	04D0 PINS	04E0/0HE0 PINS	R.T.A. CABLE LEADS COLOR
CHANNEL B+	3	3	GREEN
CHANNEL B-	4	4	PURPLE
CHANNEL A+	1	1	BLUE
CHANNEL A-	2	2	BROWN
+ DC (5V)	8	8	RED
GROUND	5	5	BLACK
INDEX+	/	7	ORANGE
INDEX-	/	6	WHITE

R.T.A. CABLE CVMRMPMxxM

Suggested R.T.A. drive series: 230 Vac X-PLUS

RM 3T3M-00HT

NEW!

BATTERY-LESS ABSOLUTE ENCODER

Dimensions (Unit:mm)

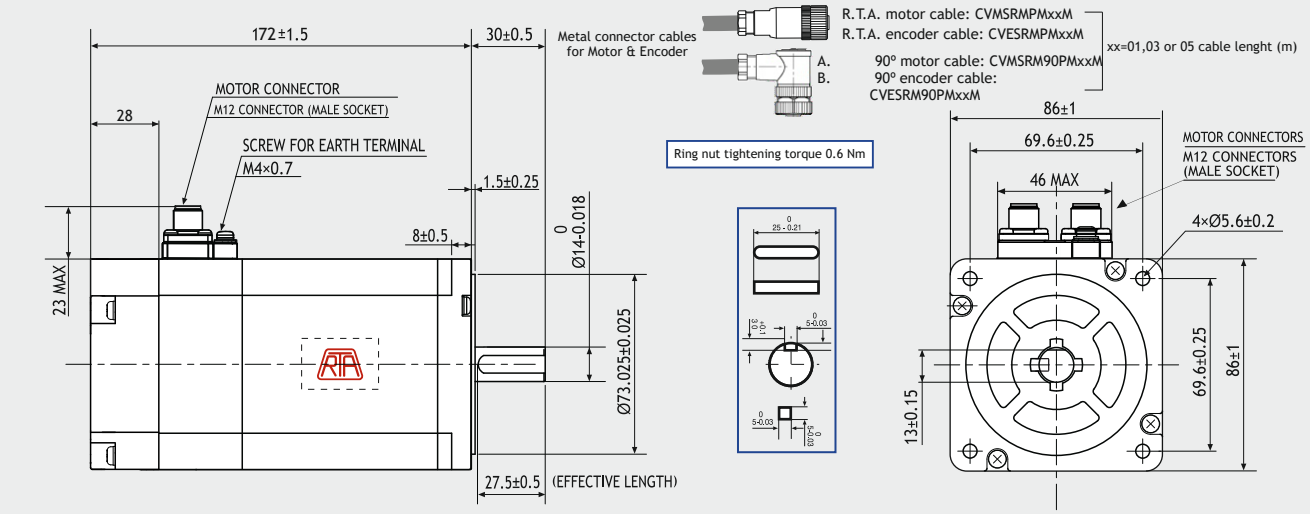

ENCODER FEATURES:

ENCODER MOTOR		RM 3T3M-00HT
RESOLUTION		DRIVE RELATED
MULTI-TURN RESOLUTION		2^{16}
CURRENT CONSUMPTION	(mA)	60
HIGH LEVEL OUTPUT	(Volt)	**5(TIP) - 4.75 (MIN)**
LOW LEVEL OUTPUT	(Volt)	0.25 (TIP) - 0.6 (MAX)
OUTPUT SIGNAL		BiSS-C/SSI
POWER SUPPLY VOLTAGE	(Volt)	5 V_{DC} ± 10%

ENCODER CONNECTOR PIN-OUT

DESCRIPTION	X-PLUS AS4 C4 CON. PINS	M12 MOTOR PINS	RTA CABLE LEADS COLOR
CLOCK +	47	1	BLUE
CLOCK -	46	2	BROWN
DATA +	45	3	GREEN
DATA -	44	4	PURPLE
GND	48	5	BLACK
RESET	42	6	WHITE
NC	43	7	ORANGE
+5 VDC	41	8	RED

MOTOR FEATURES:

MODEL		RM 3T3M
BASIC STEP ANGLE		1.8 ± 0.09°
BIPOLAR CURRENT	(A)	4
RESISTANCE	(Ohm)	1 7.9
INDUCTANCE	(mH)	920
BIPOLAR HOLDING TORQUE	(Ncm)	4500
ROTOR INERTIA	(Kgm ^{2} x 10 $^{-7}$)	2050
THEORETICAL ACCELERATION	(rad x sec.$^{-2}$)	0 241
BACK E.M.F.	(V/Krpm)	4.2
MASS	(Kg)	
INTERNATIONAL STANDARDS		UL, CSA, CE, RoHS
INSULATION VOLTAGE	(V)	250 V_{AC} (350 V_{DC})
PROTECTION DEGREE - INSULATION CLASS		IP 54 - CLASS F
LEADS CODE		V

TORQUE/SPEED CURVE

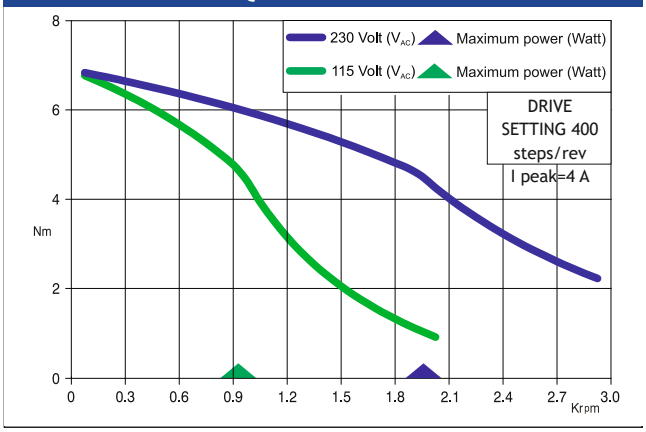

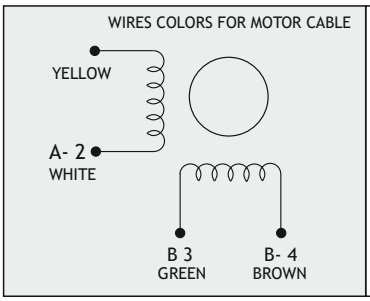

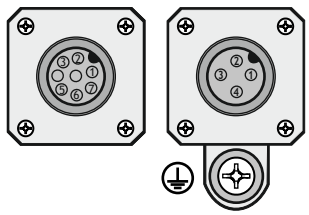

MOTOR CONNECTOR HIGH SIDE VIEW

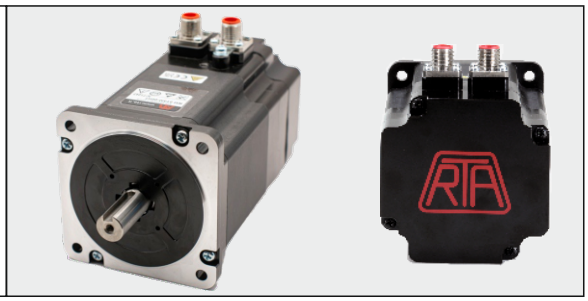

Only for R.T.A. 230 Vac X-PLUS AS4 drive

RM 3T3M-0XX0

Dimensions (Unit:mm)

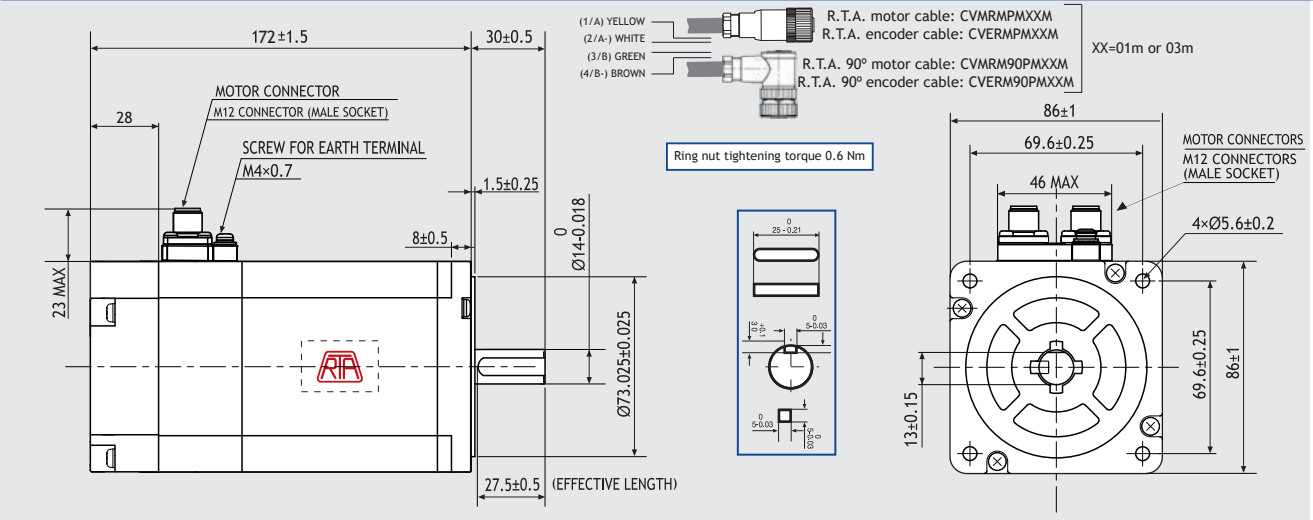

ENCODER OPTIONS:		RM 3T3M-04D0	RM 3T3M-04E0	RM 3T3M-0HE0
RESOLUTION		400 cpr	400 cpr	4000 cpr
INDEX		No	Yes	Yes
CURRENT CONSUMPTION	(mA)	50	50	85
HIGH LEVEL OUTPUT	(Volt)	5 (TIP) - 4.75 (MIN) (I_{MAX}=25mA)	3.4 (TIP) - 2.4 (MIN) (I_{MAX}=20mA)	3.4 (TIP) - 2.4 (MIN) (I_{MAX}=20mA)
LOW LEVEL OUTPUT	(Volt)	0.25 (TIP) - 0.6 (MAX) (I_{MAX}=25mA)	0.2 (TIP) - 0.4 (MAX) (I_{MAX}=20mA)	0.2 (TIP) - 0.4 (MAX) (I_{MAX}=20mA)
OUTPUT SIGNAL		Differential	Differential	Differential
MAXIMUM FREQUENCY	(KHz)	100	100	720
POWER SUPPLY VOLTAGE	(Volt)	5 V_{DC} ± 10%	5 V_{DC} ± 10%	5 V_{DC} ± 10%

FEATURES

MODEL		RM 3T3M
BASIC STEP ANGLE		1.8 ± 0.09°
BIPOLAR CURRENT	(A)	4
RESISTANCE	(Ohm)	1
INDUCTANCE	(mH)	7.9
BIPOLAR HOLDING TORQUE	(Ncm)	920
ROTOR INERTIA	(Kgm ^{2} x 10 $^{-7}$)	4500
THEORETICAL ACCELERATION	(rad x sec.$^{-2}$)	20500
BACK E.M.F.	(V/Krpm)	241
MASS	(Kg)	4.2
INTERNATIONAL STANDARDS		UL, CSA, CE, RoHS
INSULATION VOLTAGE	(V)	250 V_{AC} (350 V_{DC})
PROTECTION DEGREE - INSULATION CLASS		IP 54 - CLASS F
LEADS CODE		V

TORQUE/SPEED CURVE

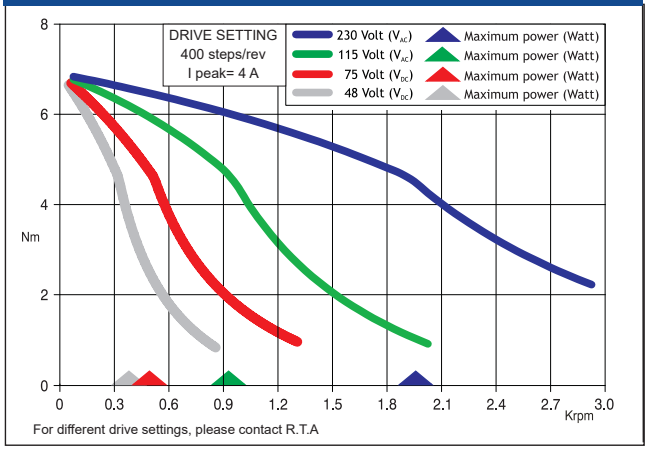

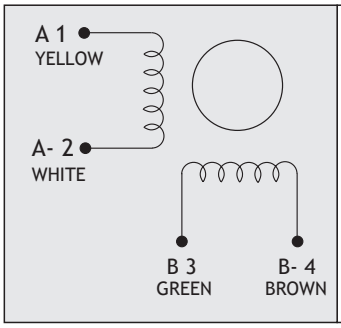

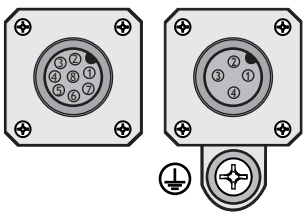

MOTOR CONNECTOR HIGH SIDE VIEW

ENCODER CONNECTOR PIN-OUT

DESCRIPTION	04D0 PINS	04E0/0HE0 PINS	R.T.A. CABLE LEADS COLOR
CHANNEL B+	3	3	GREEN
CHANNEL B-	4	4	PURPLE
CHANNEL A+	1	1	BLUE
CHANNEL A-	2	2	BROWN
+ DC (5V)	8	8	RED
GROUND	5	5	BLACK
INDEX+	/	7	ORANGE
INDEX-	/	6	WHITE

R.T.A. CABLE CVMRMPMxxM

Suggested R.T.A. drive series: 230 Vac X-PLUS

STEPPING MOTORS

TRADITIONAL STEPPING MOTORS

SH2141-5541

SANYO DENKI
SANMOTION

Dimensions (Unit:mm)

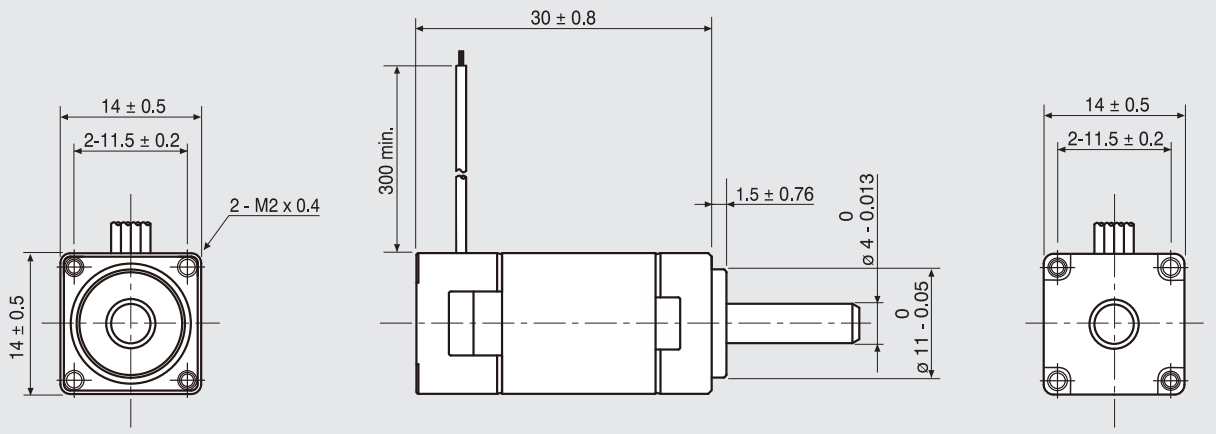

FEATURES

MODEL		SH2141-5541
BASIC STEP ANGLE		1.8° ± 0.09°
BIPOLAR CURRENT	(Amp)	0.3
UNIPOLAR CURRENT	(Amp)	
RESISTANCE	(Ohm)	21
INDUCTANCE	(mH)	4.2
BIPOLAR HOLDING TORQUE	(Ncm)	0.65
UNIPOLAR HOLDING TORQUE	(Ncm)	
ROTOR INERTIA	(Kgm ^{2} x 10 $^{-7}$)	0.58
THEORETICAL ACCELERATION	(rad x sec.$^{-2}$)	112000
BACK E.M.F.	(V/Krpm)	10
MASS	(Kg)	0.028
LEADS CODE		V

TORQUE/SPEED CURVE

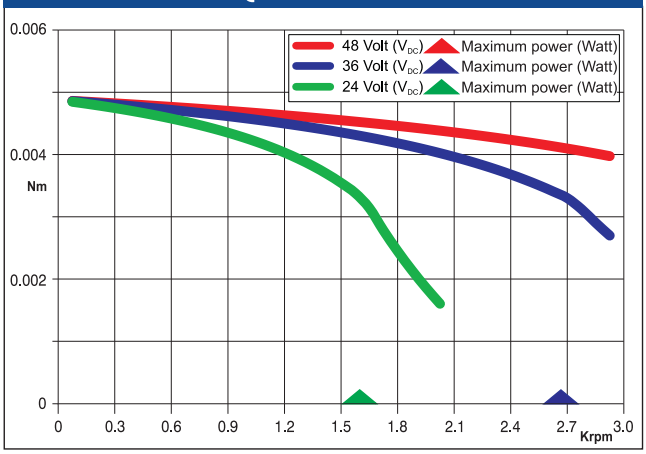

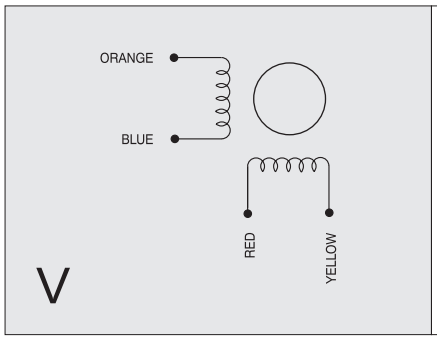

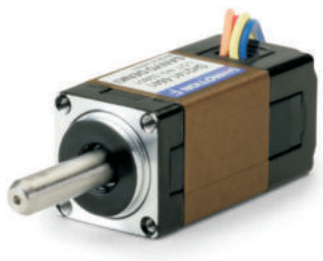

Suggested R.T.A. drive series: CSD, FLEX-DRIVE

SH2281-5271

SANYO DENKI
SANMOTION

Dimensions (Unit:mm)

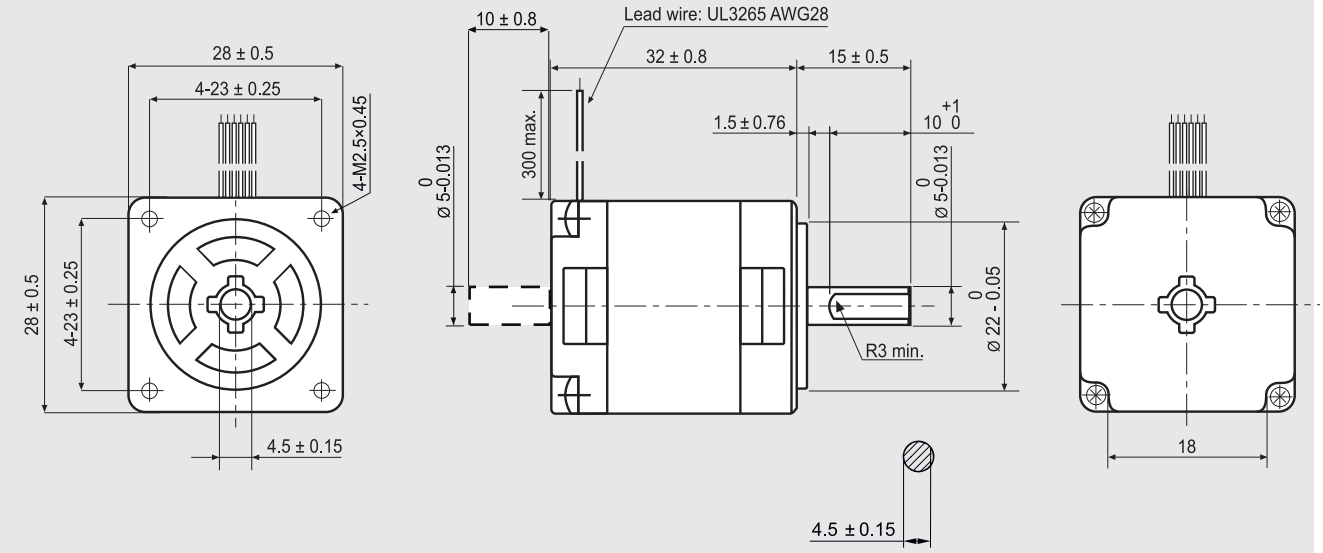

FEATURES

MODEL		SH2281-5271 (SH2281-5231)
BASIC STEP ANGLE		1.8° ± 0.09°
BIPOLAR CURRENT	(Amp)	0.7 (*)
UNIPOLAR CURRENT	(Amp)	1.0
RESISTANCE	(Ohm)	2.85
INDUCTANCE	(mH)	1.0
BIPOLAR HOLDING TORQUE	(Ncm)	7
UNIPOLAR HOLDING TORQUE	(Ncm)	5.5
ROTOR INERTIA	(Kgm ^{2} x 10 $^{-7}$)	10
THEORETICAL ACCELERATION	(rad x sec.$^{-2}$)	70000
BACK E.M.F.	(V/Krpm)	15
MASS	(Kg)	0.11
LEADS CODE		IV

TORQUE/SPEED CURVE

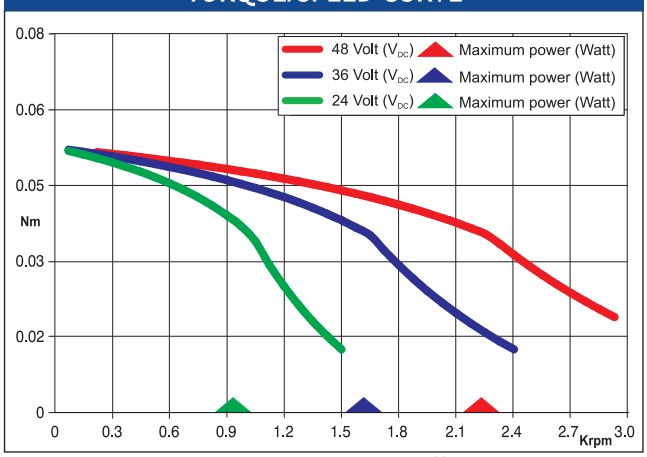

(*) Bipolar series connection.

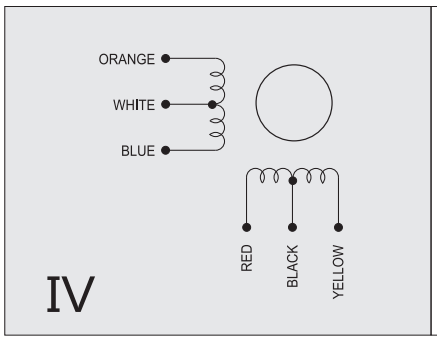

Suggested R.T.A. drive series: BSD, CSD, ADW, HGD, FLEX-DRIVE

SH2285-5271

SANYO DENKI
SANMOTION

Dimensions (Unit:mm)

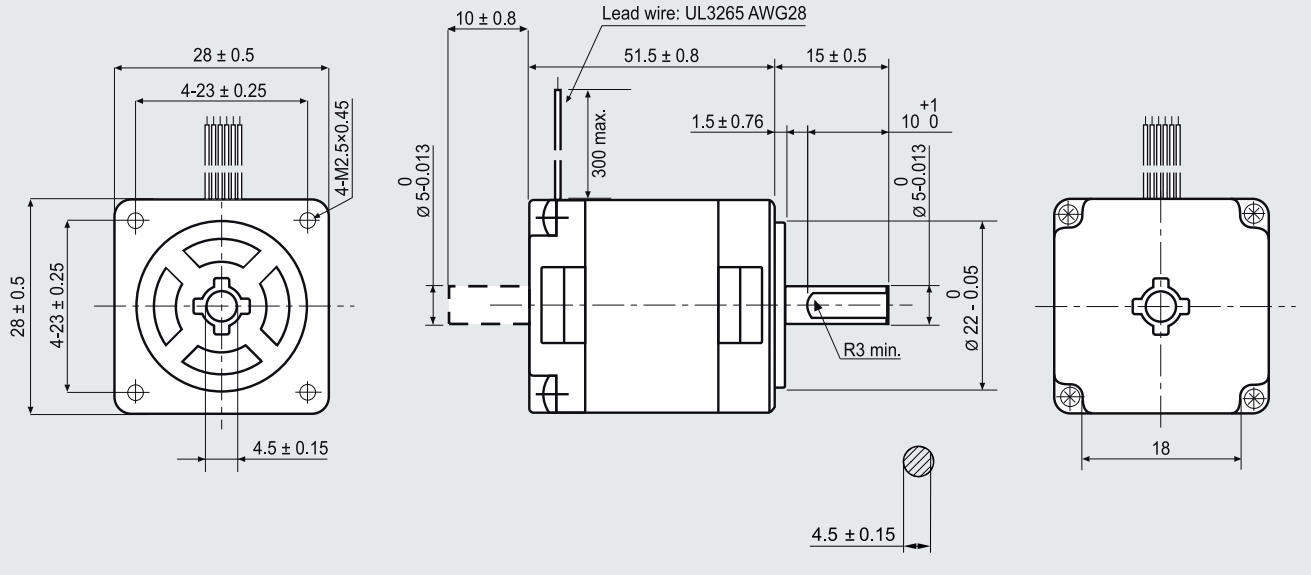

FEATURES

MODEL		SH2285-5271 (SH2285-5231)
BASIC STEP ANGLE		1.8° ± 0.09°
BIPOLAR CURRENT	(Amp)	0.7 (*)
UNIPOLAR CURRENT	(Amp)	1.0
RESISTANCE	(Ohm)	4.1
INDUCTANCE	(mH)	1.9
BIPOLAR HOLDING TORQUE	(Ncm)	14.5
UNIPOLAR HOLDING TORQUE	(Ncm)	11.5
ROTOR INERTIA	(Kgm ^{2} x 10 $^{-7}$)	22
THEORETICAL ACCELERATION	(rad x sec.$^{-2}$)	66000
BACK E.M.F.	(V/Krpm)	15
MASS	(Kg)	0.2
LEADS CODE		IV

TORQUE/SPEED CURVE

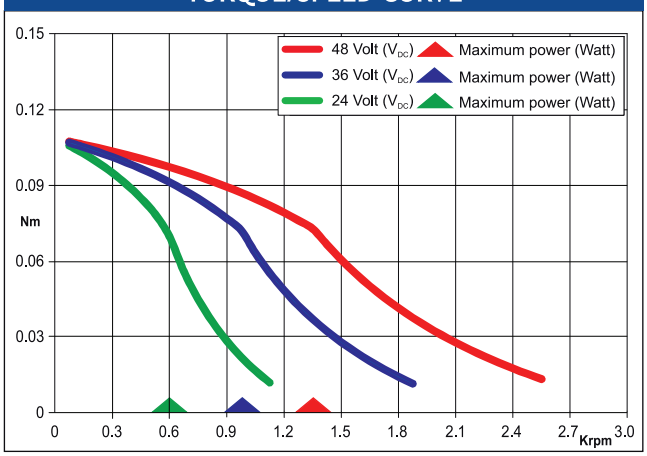

(*) Bipolar series connection.

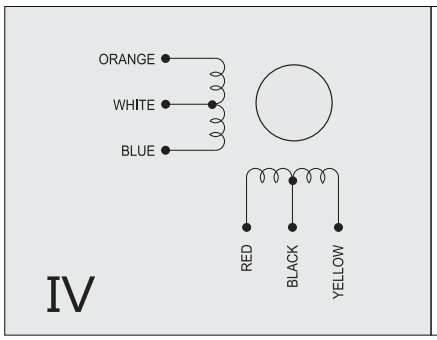

Suggested R.T.A. drive series: BSD, CSD, ADW, HGD, FLEX-DRIVE

SS2421-5041

PANCAKE TYPE motor

SANYO DENKI
SANMOTION

Dimensions (Unit:mm)

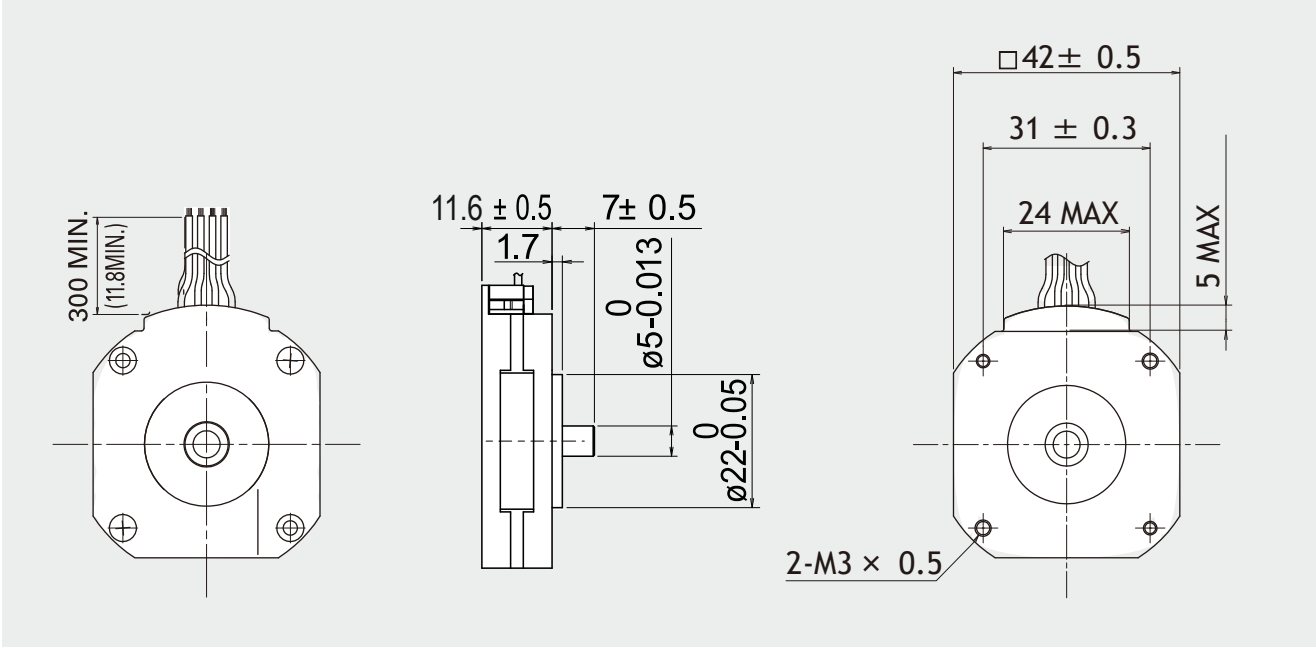

FEATURES

MODEL		SS2421-5041
BASIC STEP ANGLE		1.8° ± 0.09°
BIPOLAR CURRENT	(Amp)	1.0
UNIPOLAR CURRENT	(Amp)	
RESISTANCE	(Ohm)	3.5
INDUCTANCE	(mH)	1.2
BIPOLAR HOLDING TORQUE	(Ncm)	8.3
UNIPOLAR HOLDING TORQUE	(Ncm)	
ROTOR INERTIA	(Kgm ^{2} x 10 $^{-7}$)	0.015
THEORETICAL ACCELERATION	(rad x sec.$^{-2}$)	55000
BACK E.M.F.	(V/Krpm)	8.0
MASS	(Kg)	0.07

TORQUE/SPEED CURVE

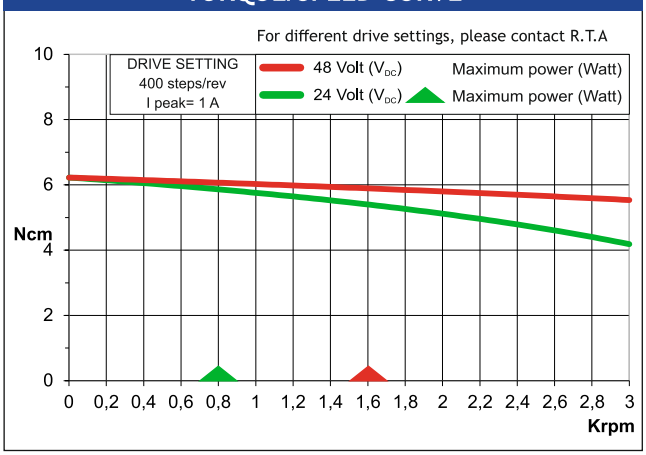

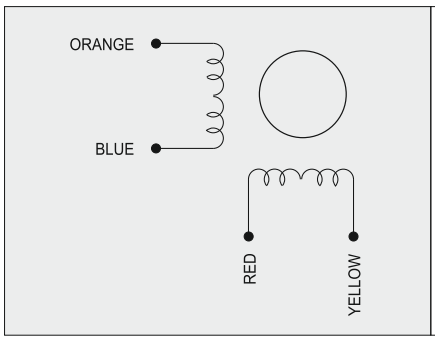

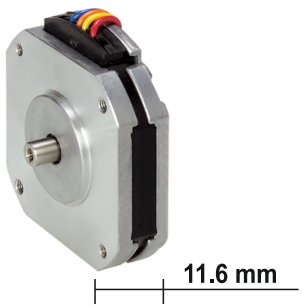

Suggested driver: contact R.T.A.

SS2422-5041

PANCAKE TYPE motor

SANYO DENKI
SANMOTION

Dimensions (Unit:mm)

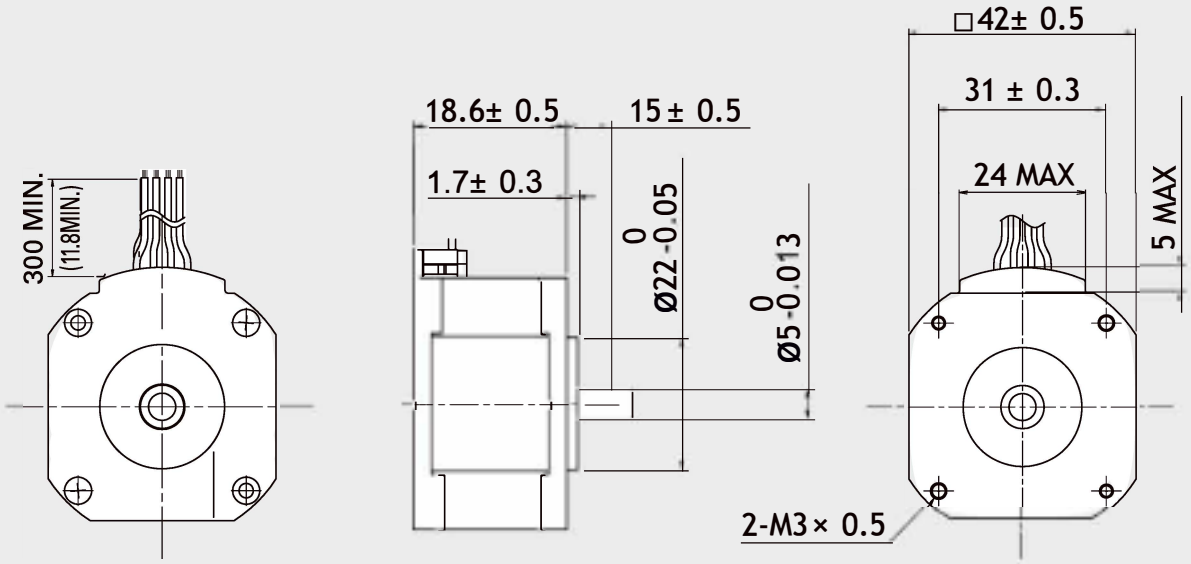

FEATURES

MODEL		SS2422-5041 (SS2422-5011)
BASIC STEP ANGLE		1.8° ± 0.09°
BIPOLAR CURRENT	(Amp)	1.0
UNIPOLAR CURRENT	(Amp)	
RESISTANCE	(Ohm)	5.4
INDUCTANCE	(mH)	2.9
BIPOLAR HOLDING TORQUE	(Ncm)	18.6
UNIPOLAR HOLDING TORQUE	(Ncm)	
ROTOR INERTIA	(Kgm ^{2} x 10 $^{-7}$)	0.028
THEORETICAL ACCELERATION	(rad x sec.$^{-2}$)	63000
BACK E.M.F.	(V/Krpm)	18
MASS	(Kg)	0.14

TORQUE/SPEED CURVE

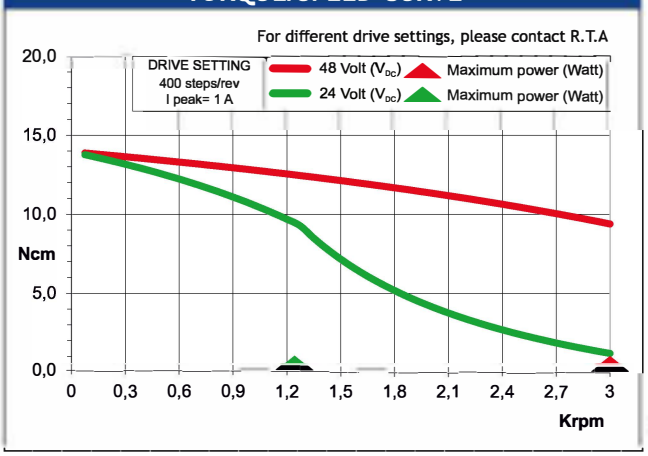

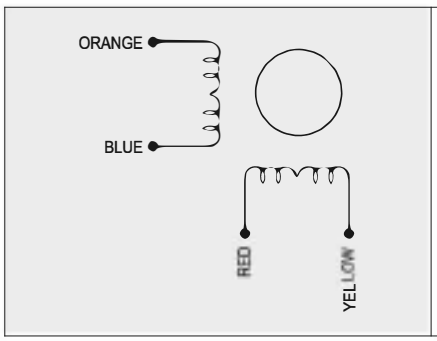

Suggested driver: contact R.T.A.

103-H5205-5040

SANYO DENKI
SANMOTION

Dimensions (Unit:mm)

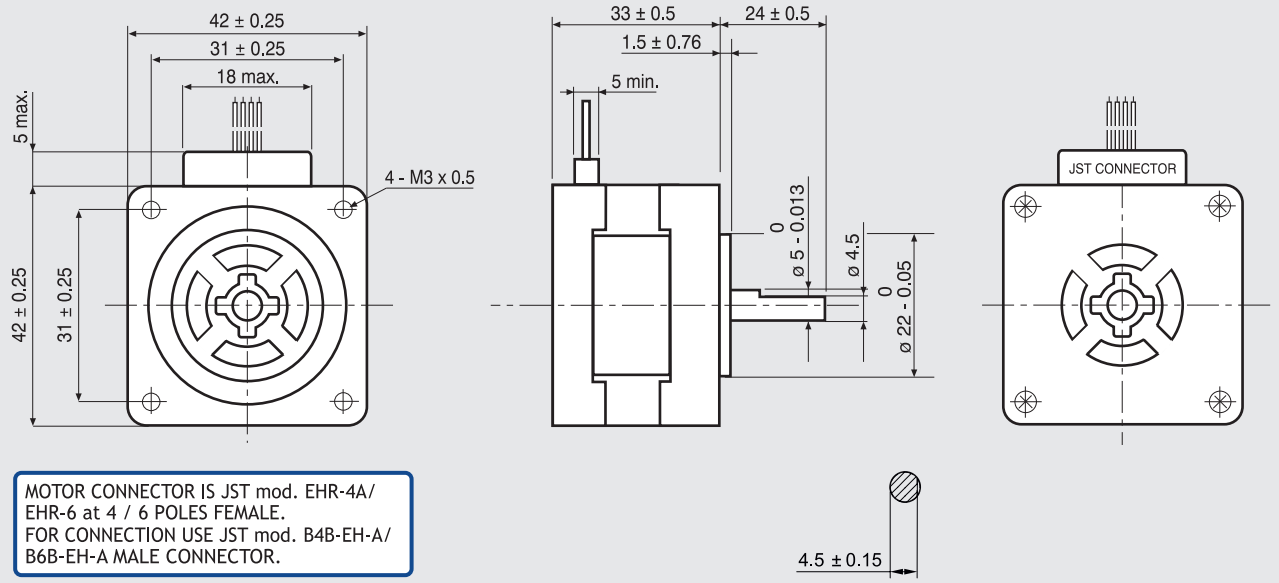

MOTOR CONNECTOR IS JST mod. EHR-4A/ EHR-6 at 4 / 6 POLES FEMALE.
FOR CONNECTION USE JST mod. B4B-EH-A/ B6B-EH-A MALE CONNECTOR.

FEATURES

MODEL		103-H5205-5040
BASIC STEP ANGLE		1.8° ± 0.09°
BIPOLAR CURRENT	(Amp)	0.25
UNIPOLAR CURRENT	(Amp)	
RESISTANCE	(Ohm)	54
INDUCTANCE	(mH)	78
BIPOLAR HOLDING TORQUE	(Ncm)	23.0
UNIPOLAR HOLDING TORQUE	(Ncm)	
ROTOR INERTIA	(Kgm ^{2} x 10 $^{-7}$)	36
THEORETICAL ACCELERATION	(rad x sec.$^{-2}$)	64000
BACK E.M.F.	(V/Krpm)	100
MASS	(Kg)	0.23
LEADS CODE		V

TORQUE/SPEED CURVE

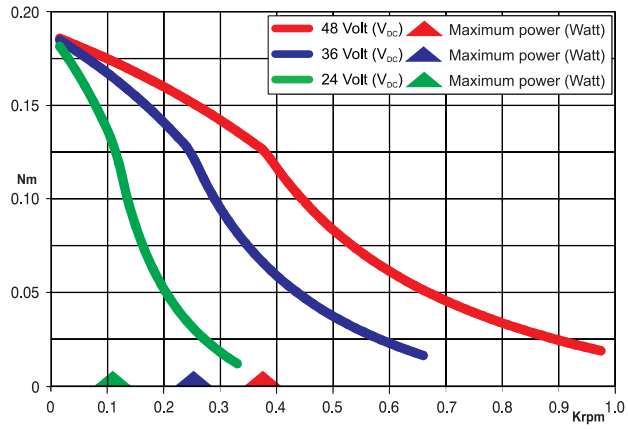

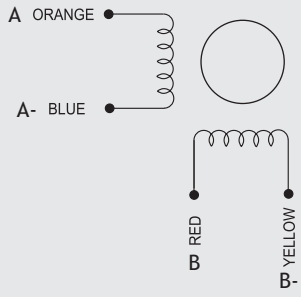

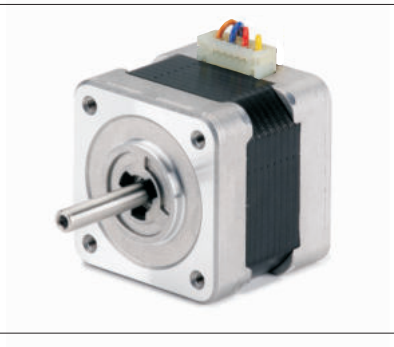

Suggested R.T.A. drive series: BSD, CSD, FLEX-DRIVE

103-H5205-0351

SANYO DENKI
SANMOTION

Dimensions (Unit:mm)

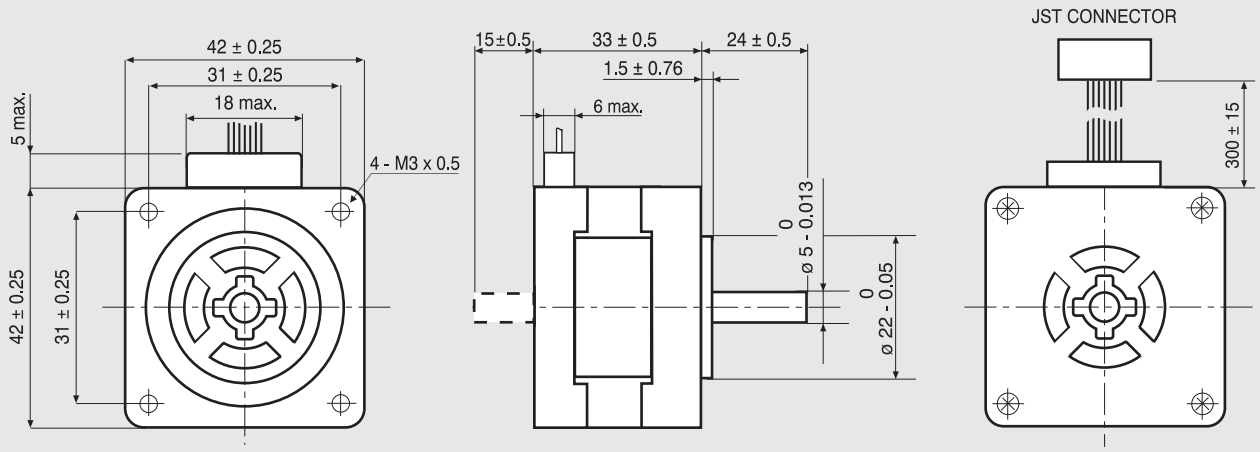

MOTOR CONNECTOR IS JST mod. EHR-6A
6 POLES FEMALE.
FOR CONNECTION USE JST
mod. B6B-EH-A MALE CONNECTOR.

FEATURES

MODEL		103-H5205-0351 (103-H5205-0312)
BASIC STEP ANGLE		1.8° ± 0.09°
BIPOLAR CURRENT	(Amp)	0.7*
UNIPOLAR CURRENT	(Amp)	1.0
RESISTANCE	(Ohm)	3.6
INDUCTANCE	(mH)	3.3
BIPOLAR HOLDING TORQUE	(Ncm)	25
UNIPOLAR HOLDING TORQUE	(Ncm)	19
ROTOR INERTIA	(Kgm ^{2} x 10 $^{-7}$)	36
THEORETICAL ACCELERATION	(rad x sec.$^{-2}$)	69800
BACK E.M.F.	(V/Krpm)	37
MASS	(Kg)	0.23
LEADS CODE		IV

Codes between brackets refer to double shaft models.

TORQUE/SPEED CURVE

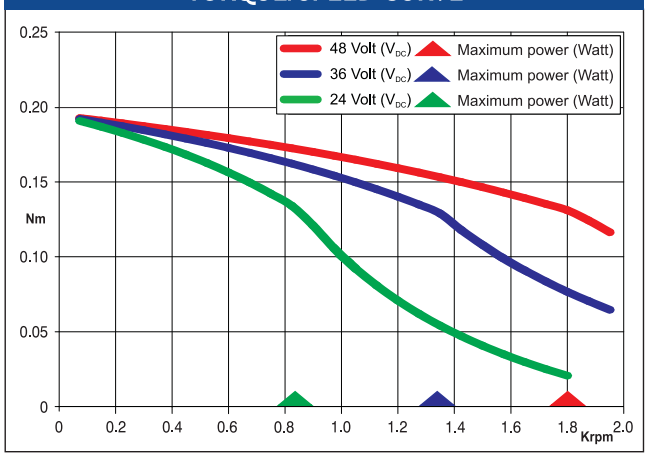

(*) Bipolar series connection.

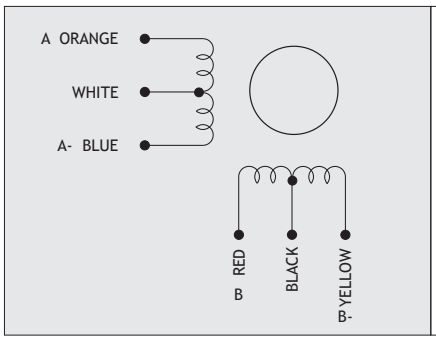

Suggested R.T.A. drive series: BSD, CSD, FLEX-DRIVE

103-H5205-4240

SANYO DENKI
SANMOTION

Dimensions (Unit:mm)

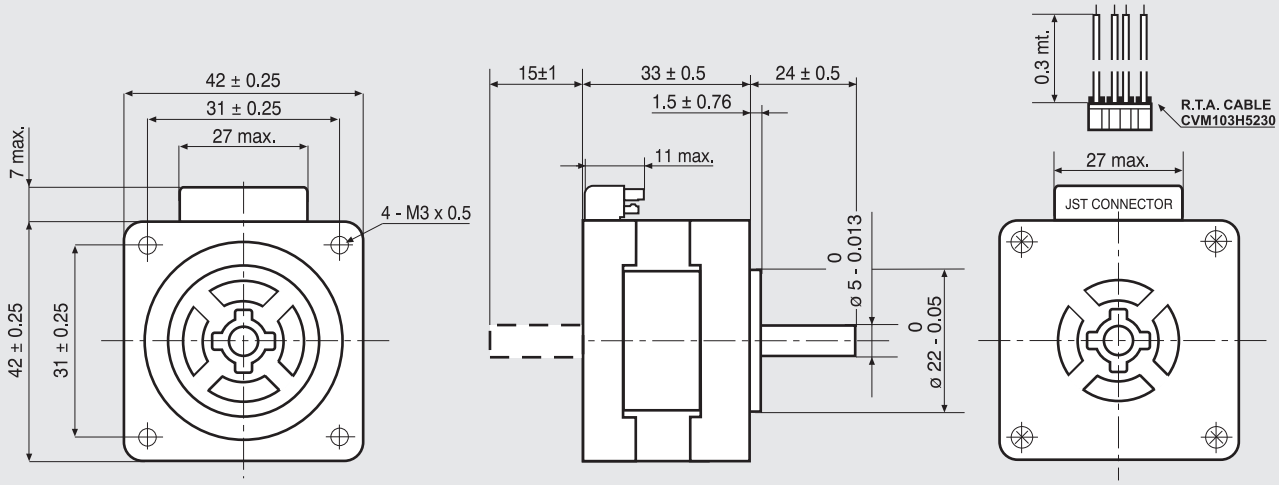

MOTOR CONNECTOR IS JST mod. B6B-EH K 6 POLES MALE.
FOR CONNECTION USE JST mod. EHR-6 FEMALE CONNECTOR AND mod. SEH-001 T-P0.6 CONTACTS.
NOTE: 103-H5205-4240 MOTORS NEED CVM103H5230 R.T.A. CABLES.
CONTACT R.T.A. FOR FURTHER DETAILS.

FEATURES

MODEL		103-H5205-4240 (103-H5205-4210)
BASIC STEP ANGLE		1.8° ± 0.09°
BIPOLAR CURRENT	(Amp)	1.0
UNIPOLAR CURRENT	(Amp)	
RESISTANCE	(Ohm)	3.4
INDUCTANCE	(mH)	6.5
BIPOLAR HOLDING TORQUE	(Ncm)	26.5
UNIPOLAR HOLDING TORQUE	(Ncm)	
ROTOR INERTIA	(Kgm ^{2} x 10 $^{-7}$)	36
THEORETICAL ACCELERATION	(rad x sec.$^{-2}$)	69800
BACK E.M.F.	(V/Krpm)	27
MASS	(Kg)	0.23
LEADS CODE		V

Codes between brackets refer to double shaft models.

TORQUE/SPEED CURVE

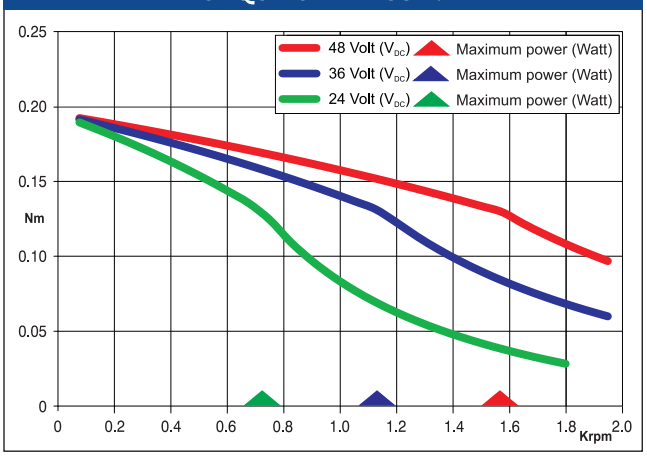

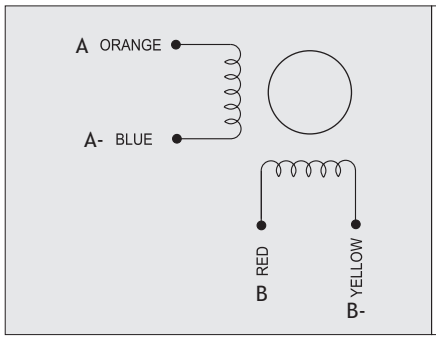

Suggested R.T.A. drive series: BSD, CSD, FLEX-DRIVE

103-H5208-0483

SANYO DENKI
SANMOTION

Dimensions (Unit:mm)

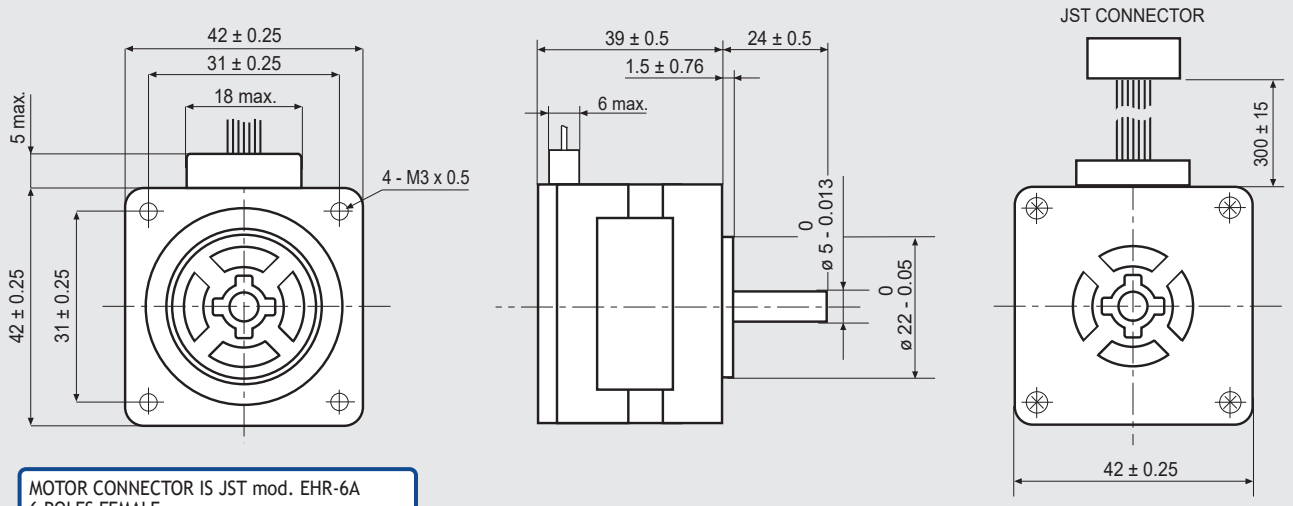

MOTOR CONNECTOR IS JST mod. EHR-6A
6 POLES FEMALE.
FOR CONNECTION USE JST
mod. B6B-EH-A MALE CONNECTOR.

FEATURES

MODEL		103-H5208-0483
BASIC STEP ANGLE		1.8° ± 0.09°
BIPOLAR CURRENT	(Amp)	0.9(*)
UNIPOLAR CURRENT	(Amp)	1.2
RESISTANCE	(Ohm)	2.9
INDUCTANCE	(mH)	3.4
BIPOLAR HOLDING TORQUE	(Ncm)	42
UNIPOLAR HOLDING TORQUE	(Ncm)	30
ROTOR INERTIA	(Kgm ^{2} x 10 $^{-7}$)	56
THEORETICAL ACCELERATION	(rad x sec.$^{-2}$)	71000
BACK E.M.F.	(V/Krpm)	19
MASS	(Kg)	0.27
LEADS CODE		IV

TORQUE/SPEED CURVE

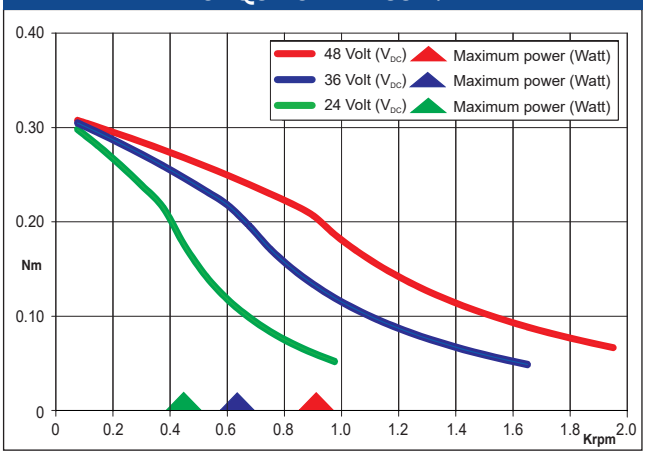

(*)Bipolar series connection.

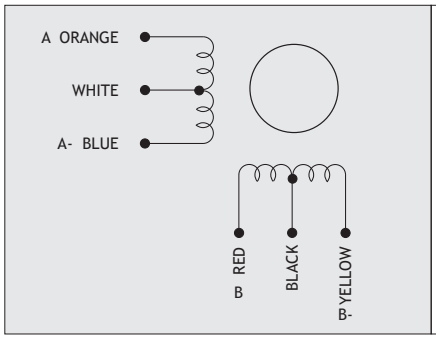

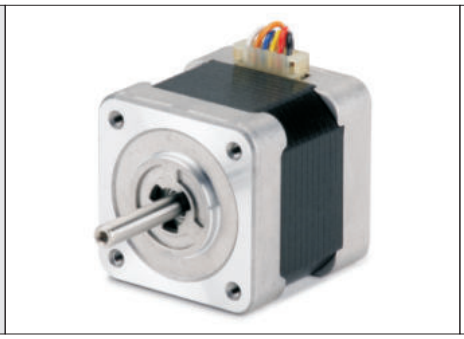

Suggested R.T.A. drive series: BSD, CSD, FLEX-DRIVE

103-H5210-4240

SANYO DENKI
SANMOTION

Dimensions (Unit:mm)

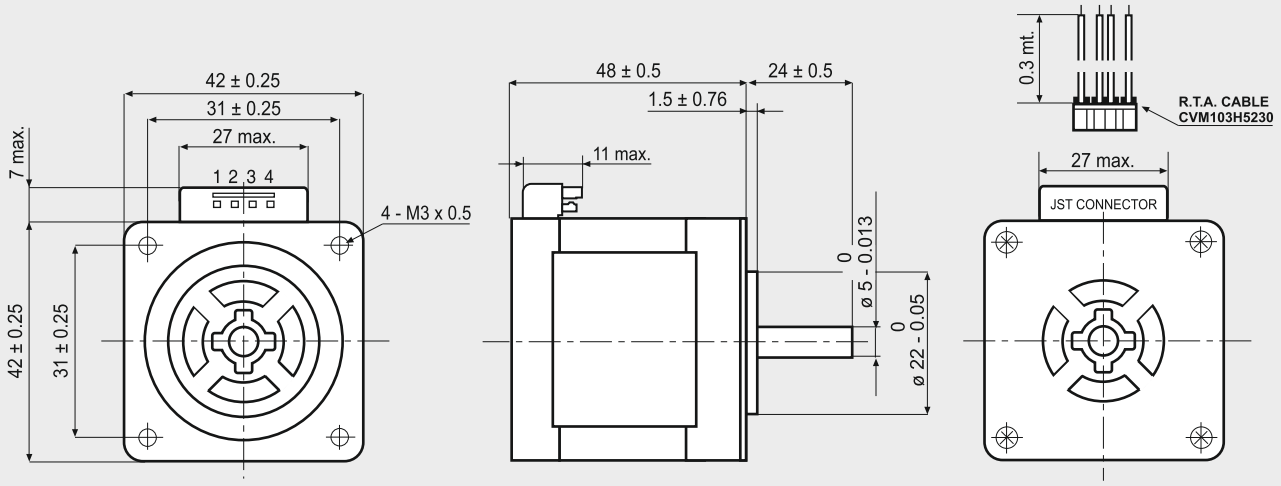

MOTOR CONNECTOR IS JST mod. B6B-EH K 6 POLES MALE.
FOR CONNECTION USE JST mod. EHR-6 FEMALE CONNECTOR AND mod. SEH-001 T-P0.6 CONTACTS.
NOTE: 103-H5210-4240 MOTORS NEED CVM103H5230 R.T.A. CABLES.
CONTACT R.T.A. FOR FURTHER DETAILS.

FEATURES

MODEL		103-H5210-4240
BASIC STEP ANGLE		1.8° ± 0.09°
BIPOLAR CURRENT	(Amp)	1.0
UNIPOLAR CURRENT	(Amp)	
RESISTANCE	(Ohm)	4.8
INDUCTANCE	(mH)	9.5
BIPOLAR HOLDING TORQUE	(Ncm)	51
UNIPOLAR HOLDING TORQUE	(Ncm)	
ROTOR INERTIA	(Kgm ^{2} x 10 $^{-7}$)	74
THEORETICAL ACCELERATION	(rad x sec.$^{-2}$)	69000
BACK E.M.F.	(V/Krpm)	14
MASS	(Kg)	0.35
LEADS CODE		V

TORQUE/SPEED CURVE

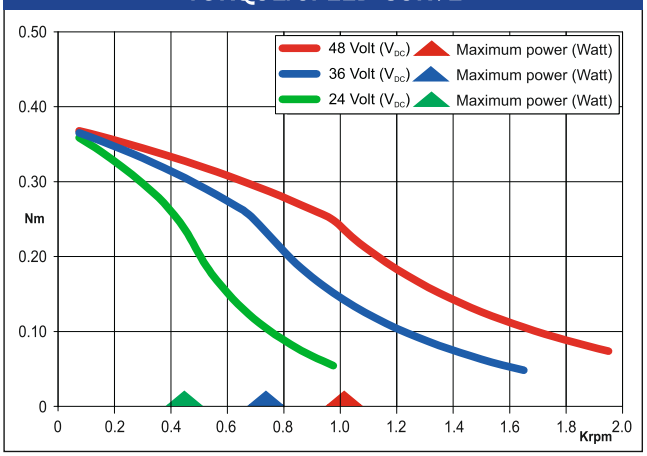

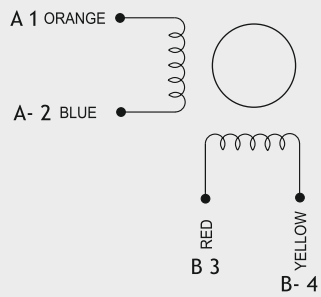

Suggested R.T.A. drive series: BSD, CSD, FLEX-DRIVE

103-H5210-4541

SANYO DENKI
SANMOTION

Dimensions (Unit:mm)

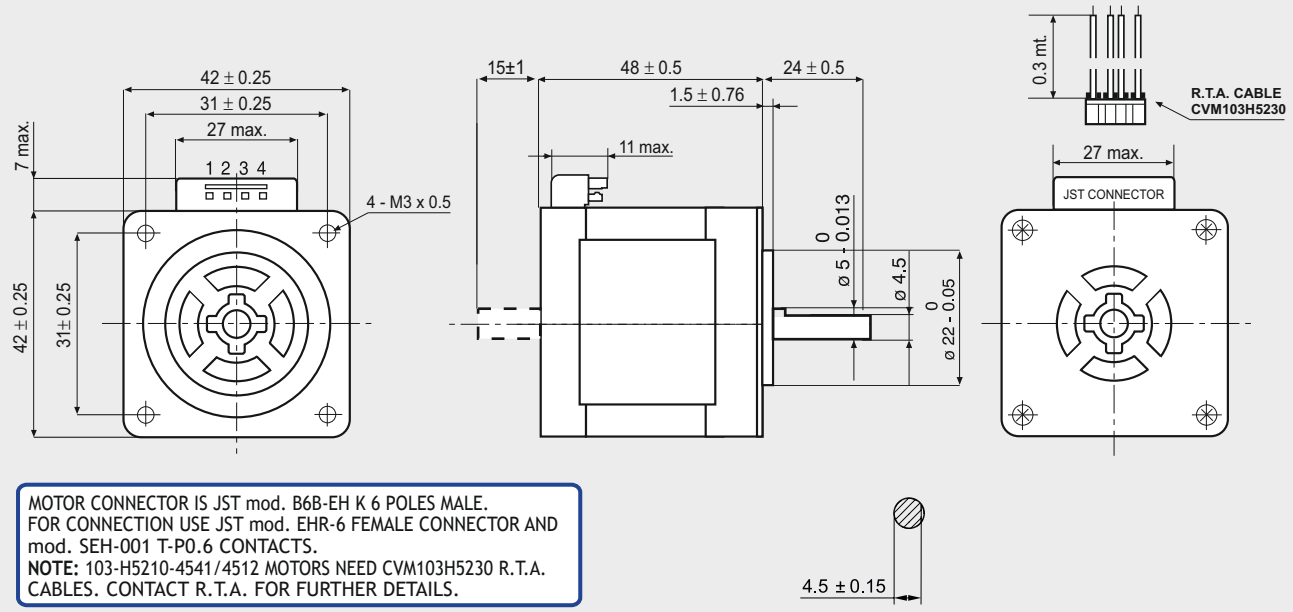

MOTOR CONNECTOR IS JST mod. B6B-EH K 6 POLES MALE.
FOR CONNECTION USE JST mod. EHR-6 FEMALE CONNECTOR AND mod. SEH-001 T-P0.6 CONTACTS.
NOTE: 103-H5210-4541/4512 MOTORS NEED CVM103H5230 R.T.A. CABLES. CONTACT R.T.A. FOR FURTHER DETAILS.

FEATURES

MODEL		103-H5210-4541 (103-H5210-4512)
BASIC STEP ANGLE		1.8° ± 0.09°
BIPOLAR CURRENT	(Amp)	2.0
UNIPOLAR CURRENT	(Amp)	
RESISTANCE	(Ohm)	1.25
INDUCTANCE	(mH)	2.4
BIPOLAR HOLDING TORQUE	(Ncm)	51
UNIPOLAR HOLDING TORQUE	(Ncm)	
ROTOR INERTIA	(Kgm ^{2} x 10 $^{-7}$)	74
THEORETICAL ACCELERATION	(rad x sec.$^{-2}$)	69000
BACK E.M.F.	(V/Krpm)	25
MASS	(Kg)	0.35
LEADS CODE		V

Codes between brackets refer to double shaft models.

TORQUE/SPEED CURVE

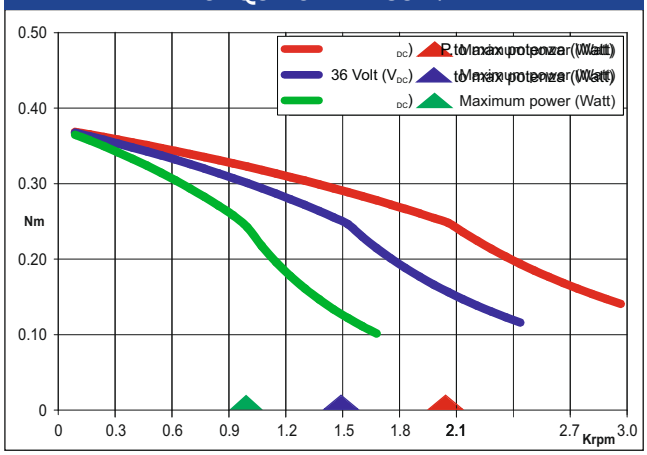

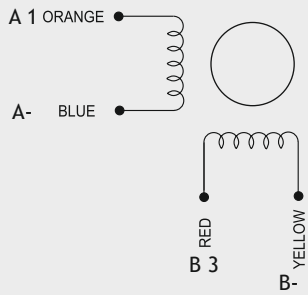

Suggested R.T.A. drive series: BSD, CSD, FLEX-DRIVE

103-H5212-4640

SANYO DENKI
SANMOTION

Dimensions (Unit:mm)

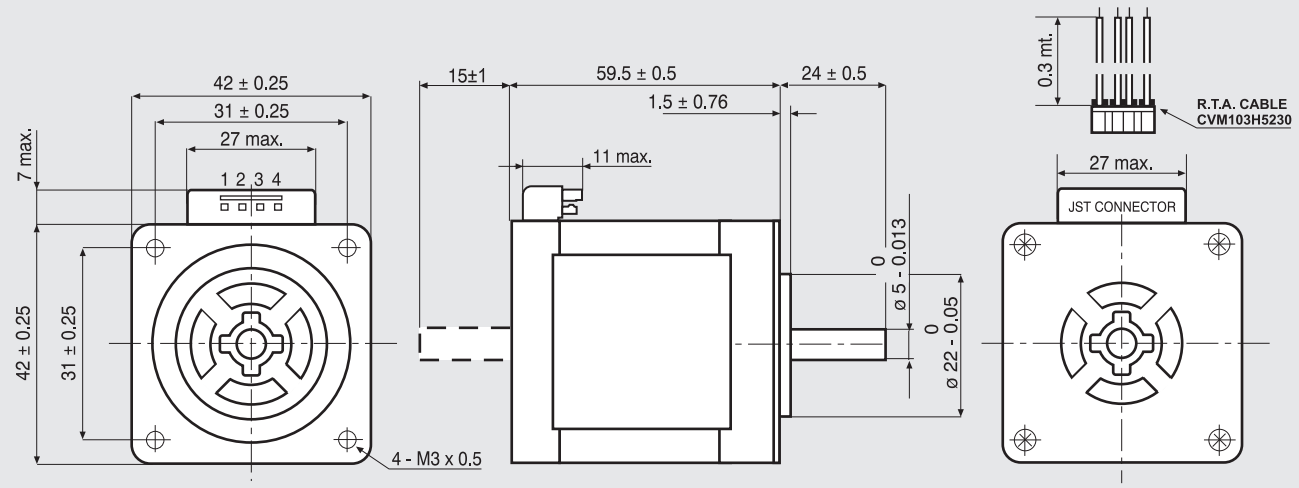

MOTOR CONNECTOR IS JST mod. B6B-EH K 6 POLES MALE.
FOR CONNECTION USE JST mod. EHR-6 FEMALE CONNECTOR AND mod. SEH-001 T-P0.6 CONTACTS.
NOTE: 103-H5212-4640 MOTORS NEED CVM103H5230 R.T.A. CABLES.
CONTACT R.T.A. FOR FURTHER DETAILS.

FEATURES

MODEL		103-H5212-4640 (103-H5212-4610)
BASIC STEP ANGLE		1.8° ± 0.09°
BIPOLAR CURRENT	(Amp)	2.0
UNIPOLAR CURRENT	(Amp)	
RESISTANCE	(Ohm)	1.5
INDUCTANCE	(mH)	3.0
BIPOLAR HOLDING TORQUE	(Ncm)	65
UNIPOLAR HOLDING TORQUE	(Ncm)	
ROTOR INERTIA	(Kgm ^{2} x 10 $^{-7}$)	110
THEORETICAL ACCELERATION	(rad x sec.$^{-2}$)	59000
BACK E.M.F.	(V/Krpm)	32
MASS	(Kg)	0.35
LEADS CODE		V

Codes between brackets refer to double shaft models.

TORQUE/SPEED CURVE

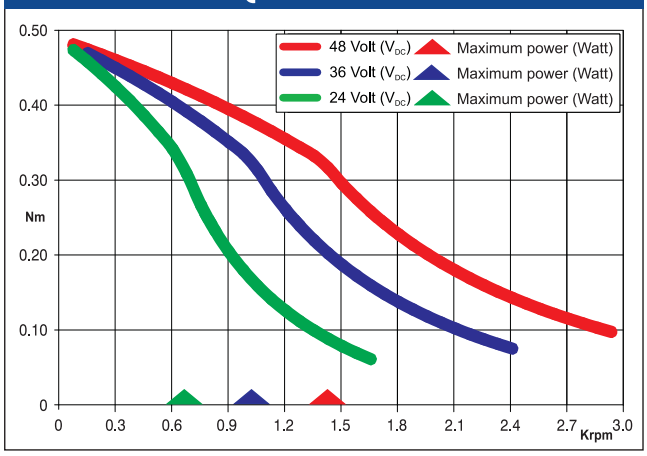

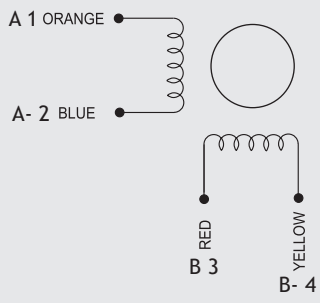

Suggested R.T.A. drive series: BSD, CSD, FLEX-DRIVE

103-H6701-0140

SANYO DENKI
SANMOTION

Dimensions (Unit:mm)

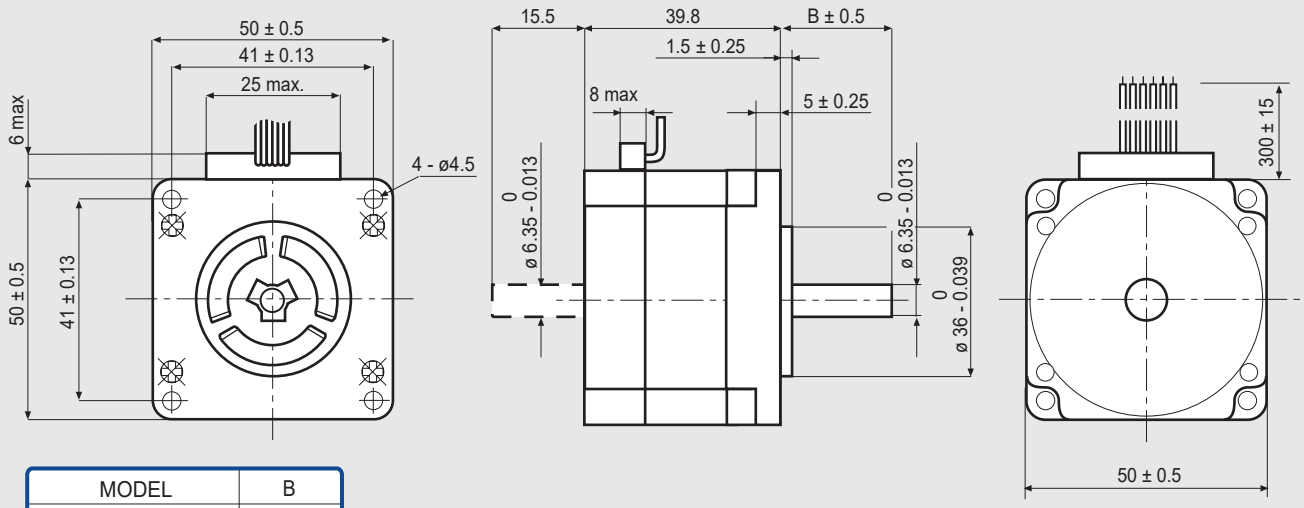

MODEL	B
103 - H6701 - 0140	20.6
103 - H6701 - 0113	28

FEATURES

MODEL		103-H6701-0140 (103-H6701-0113)
BASIC STEP ANGLE		1.8° ± 0.09°
BIPOLAR CURRENT	(Amp)	0.7 (*)
UNIPOLAR CURRENT	(Amp)	1.0
RESISTANCE	(Ohm)	4.3
INDUCTANCE	(mH)	6.8
BIPOLAR HOLDING TORQUE	(Ncm)	38
UNIPOLAR HOLDING TORQUE	(Ncm)	28
ROTOR INERTIA	(Kgm ^{2} x 10 $^{-7}$)	57
THEORETICAL ACCELERATION	(rad x sec.$^{-2}$)	66000
BACK E.M.F.	(V/Krpm)	20
MASS	(Kg)	0.35
LEADS CODE		IV

Codes between brackets refer to double shaft models.

TORQUE/SPEED CURVE

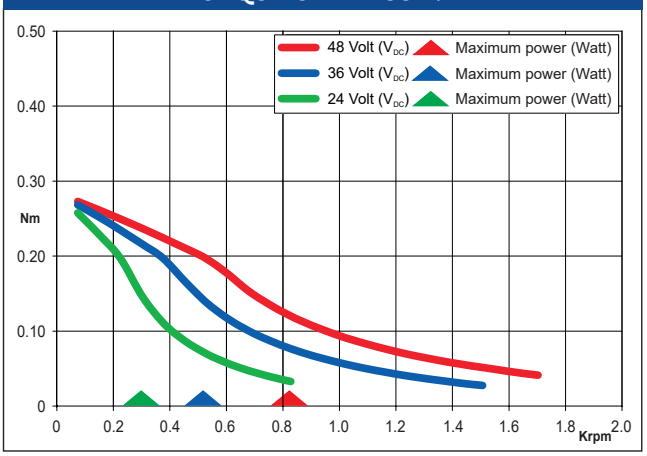

(*) Bipolar series connection.

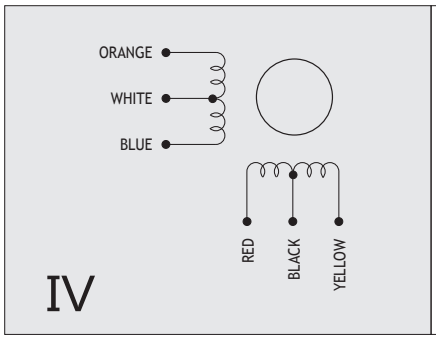

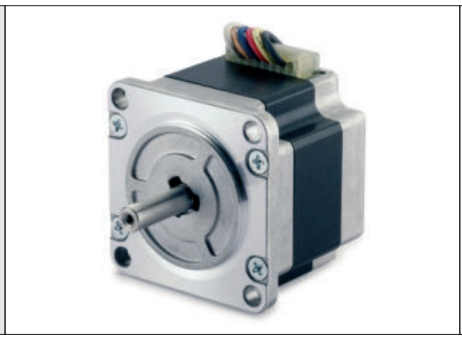

Suggested R.T.A. drive series: BSD, CSD, FLEX-DRIVE

103-H6703-0440

SANYO DENKI
SANMOTION

Dimensions (Unit:mm)

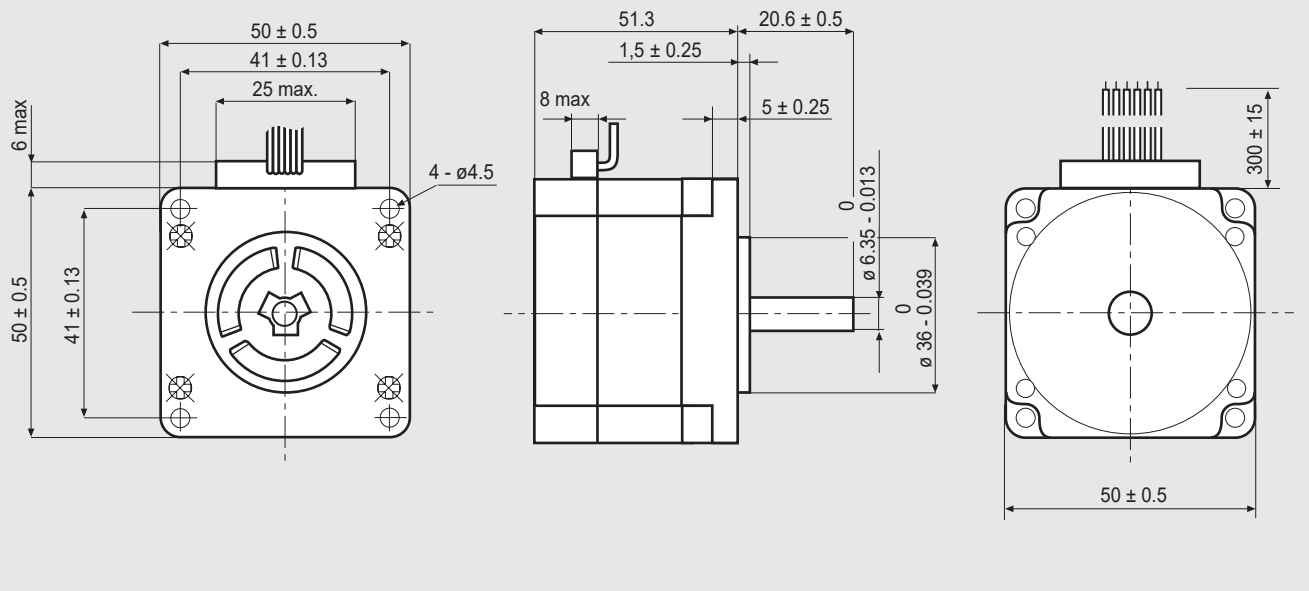

FEATURES

MODEL		103-H6703-0440
BASIC STEP ANGLE		1.8° ± 0.09°
BIPOLAR CURRENT	(Amp)	1.4(*)
UNIPOLAR CURRENT	(Amp)	2.0
RESISTANCE	(Ohm)	1.6
INDUCTANCE	(mH)	3.2
BIPOLAR HOLDING TORQUE	(Ncm)	68
UNIPOLAR HOLDING TORQUE	(Ncm)	49
ROTOR INERTIA	(Kgm ^{2} x 10 $^{-7}$)	118
THEORETICAL ACCELERATION	(rad x sec.$^{-2}$)	58000
BACK E.M.F.	(V/Krpm)	17.5
MASS	(Kg)	0.5
LEADS CODE		IV

TORQUE/SPEED CURVE

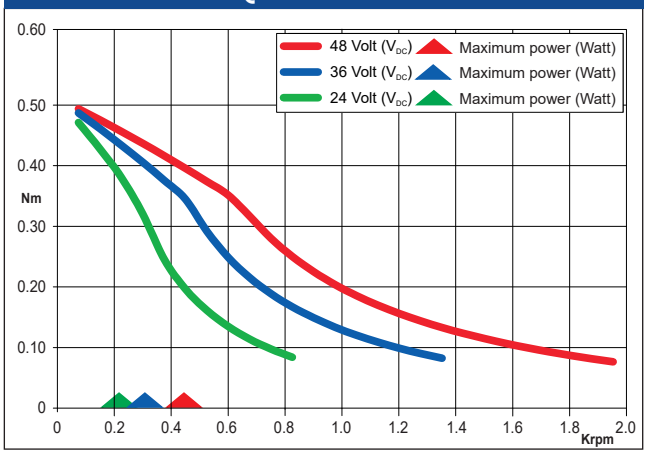

(*) Bipolar series connection.

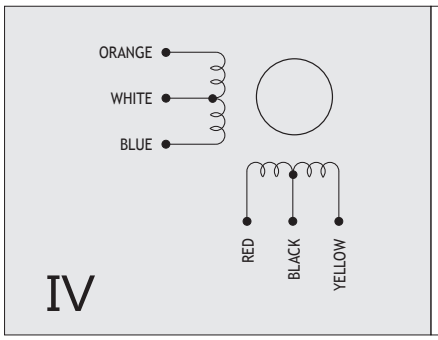

Suggested R.T.A. drive series: BSD, CSD, FLEX-DRIVE

103-H7121-0440

SANYO DENKI
SANMOTION

Dimensions (Unit:mm)

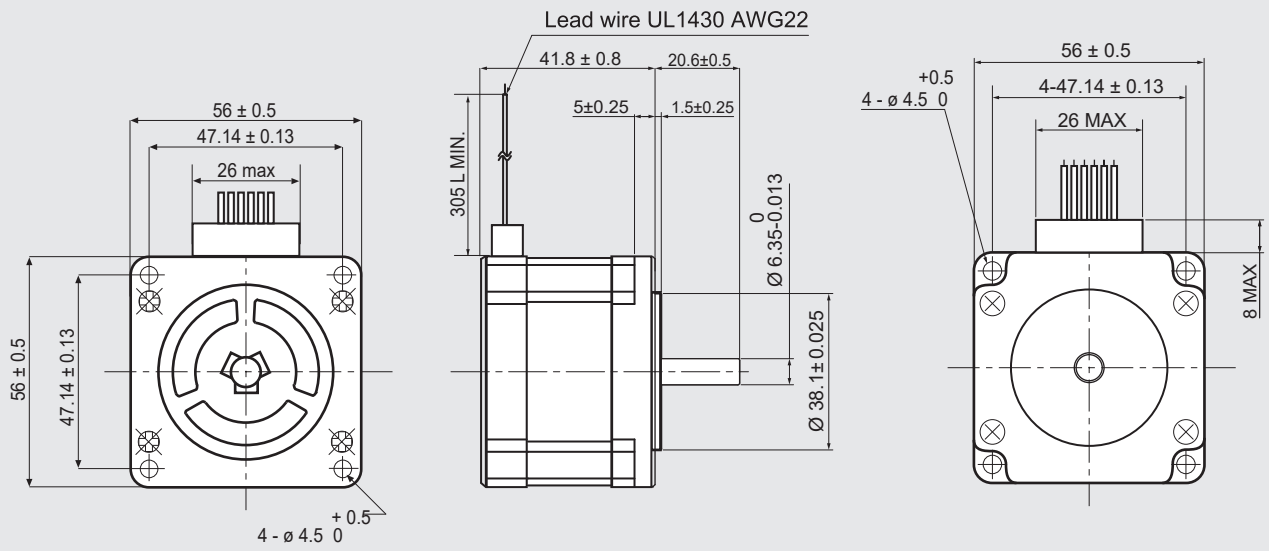

FEATURES

MODEL		103-H7121-0440
BASIC STEP ANGLE		1.8° ± 0.09°
BIPOLAR CURRENT	(Amp)	1.5(*)
UNIPOLAR CURRENT	(Amp)	2.0
RESISTANCE	(Ohm)	1.25
INDUCTANCE	(mH)	1.9
BIPOLAR HOLDING TORQUE	(Ncm)	49
UNIPOLAR HOLDING TORQUE	(Ncm)	39
ROTOR INERTIA	(Kgm ^{2} x 10 $^{-7}$)	100
THEORETICAL ACCELERATION	(rad x sec.$^{-2}$)	50000
BACK E.M.F.	(V/Krpm)	20
MASS	(Kg)	0.47
LEADS CODE		IV

TORQUE/SPEED CURVE

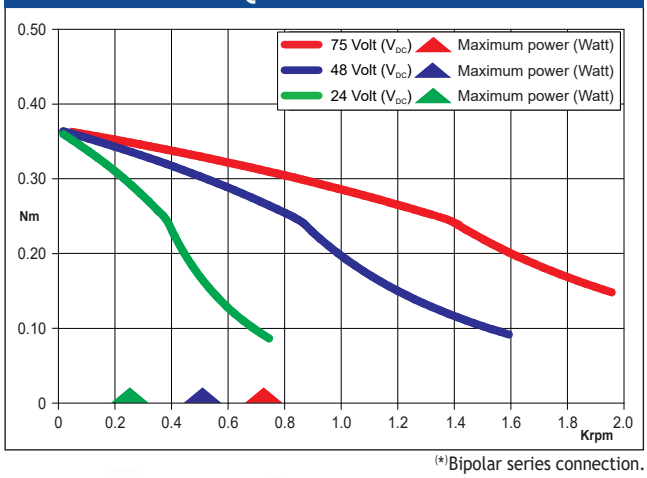

(*)Bipolar series connection.

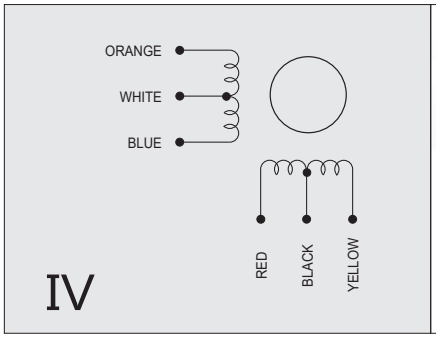

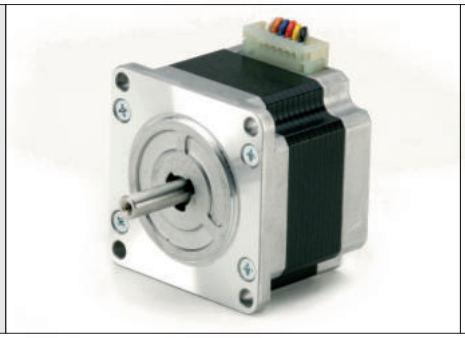

Suggested R.T.A. drive series: BSD, CSD, NDC, ADW, HGD, FLEX-DRIVE

103-H7123-5040

SANYO DENKI
SANMOTION

Dimensions (Unit:mm)

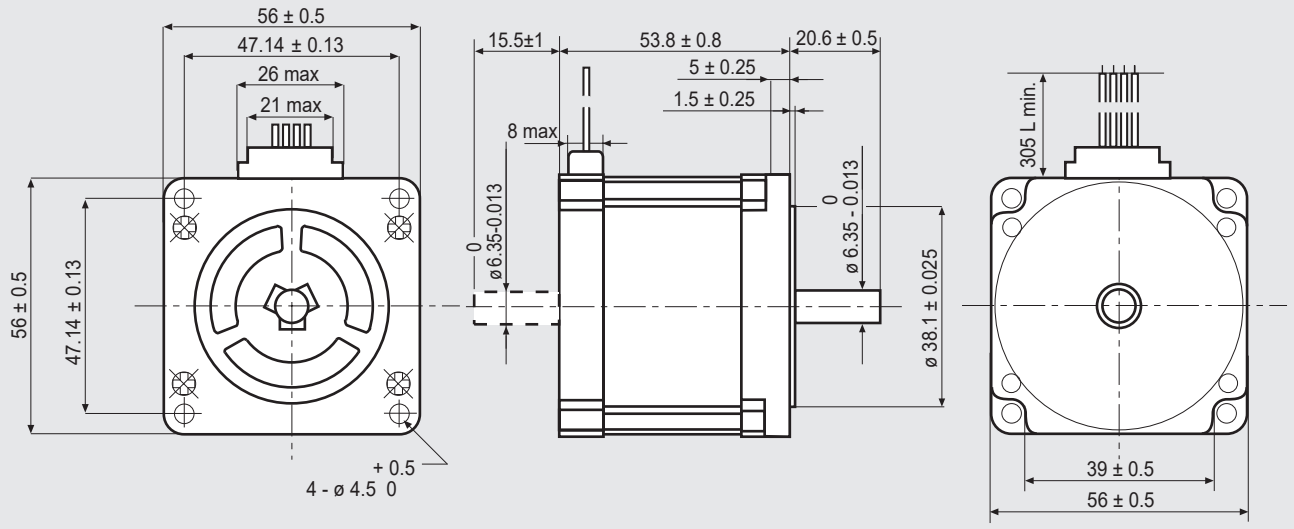

FEATURES

MODEL		103-H7123-5040 (103-H7123-5010)
BASIC STEP ANGLE		1.8° ± 0.09°
BIPOLAR CURRENT	(Amp)	2.0
UNIPOLAR CURRENT	(Amp)	
RESISTANCE	(Ohm)	0.8
INDUCTANCE	(mH)	3.8
BIPOLAR HOLDING TORQUE	(Ncm)	85
UNIPOLAR HOLDING TORQUE	(Ncm)	
ROTOR INERTIA	(Kgm ^{2} x 10 $^{-7}$)	210
THEORETICAL ACCELERATION	(rad x sec.$^{-2}$)	38500
BACK E.M.F.	(V/Krpm)	31
MASS	(Kg)	0.65
LEADS CODE		V

Codes between brackets refer to double shaft models.

TORQUE/SPEED CURVE

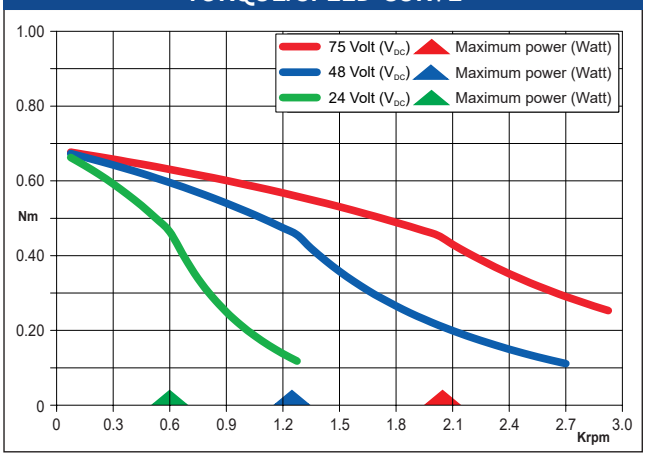

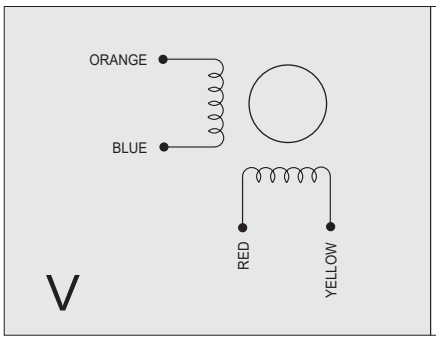

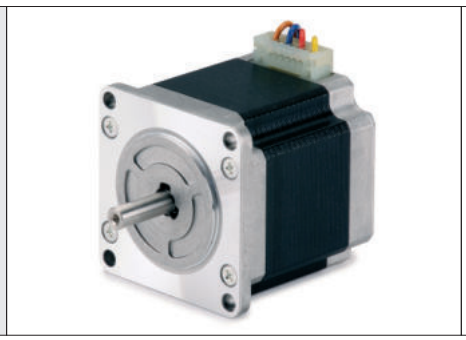

Suggested R.T.A. drive series: BSD, CSD, NDC, ADW, HGD, FLEX-DRIVE

103-H7123-0140

SANYO DENKI
SANMOTION

Dimensions (Unit:mm)

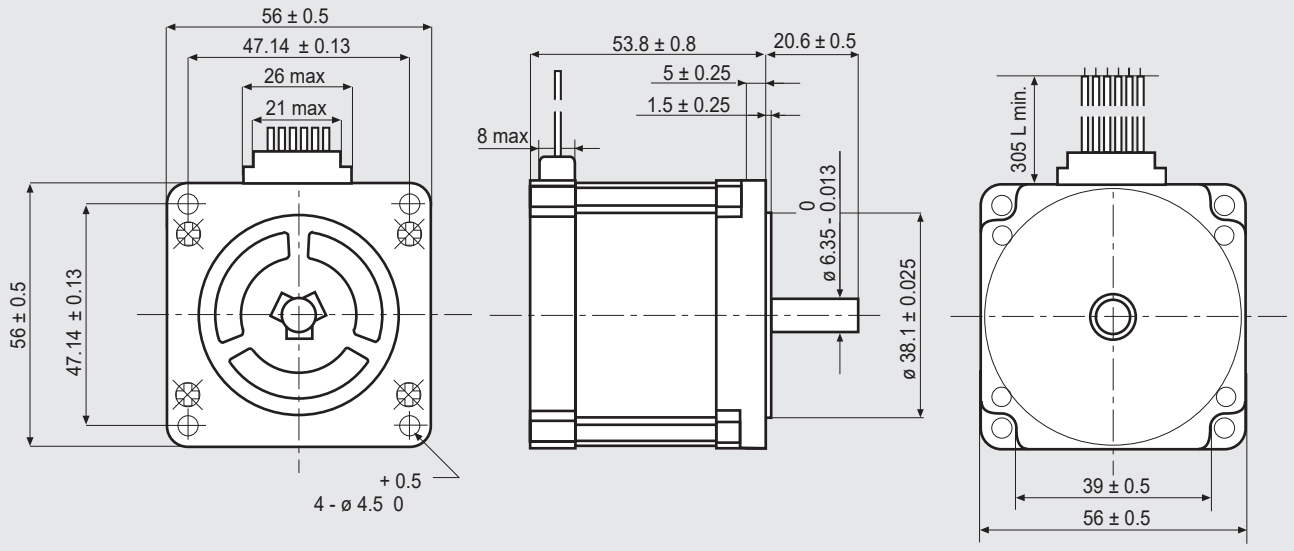

FEATURES

MODEL		103-H7123-0140
BASIC STEP ANGLE		1.8° ± 0.09°
BIPOLAR CURRENT	(Amp)	0.7 (*)
UNIPOLAR CURRENT	(Amp)	1.0
RESISTANCE	(Ohm)	6.7
INDUCTANCE	(mH)	15
BIPOLAR HOLDING TORQUE	(Ncm)	110
UNIPOLAR HOLDING TORQUE	(Ncm)	85
ROTOR INERTIA	(Kgm ^{2} x 10 $^{-7}$)	210
THEORETICAL ACCELERATION	(rad x sec.$^{-2}$)	50000
BACK E.M.F.	(V/Krpm)	60
MASS	(Kg)	0.65
LEADS CODE		IV

TORQUE/SPEED CURVE

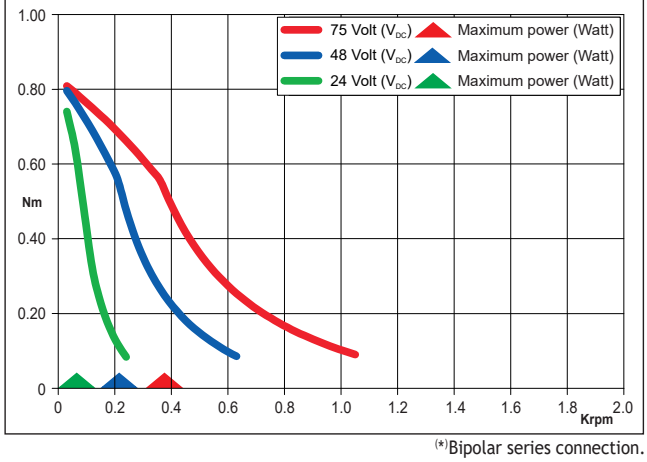

(*)Bipolar series connection.

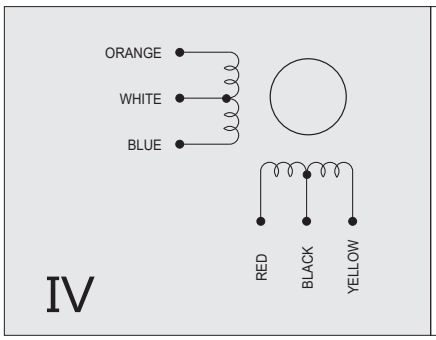

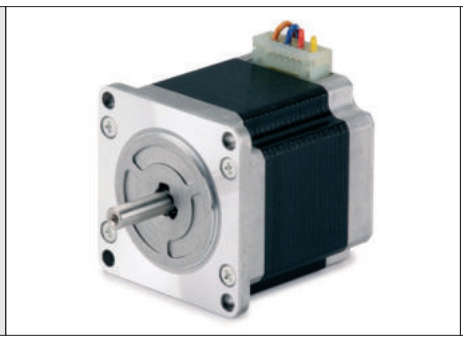

Suggested R.T.A. drive series: BSD, CSD, NDC, ADW, HGD, FLEX-DRIVE

103-H7123-0440

SANYO DENKI
SANMOTION

Dimensions (Unit:mm)

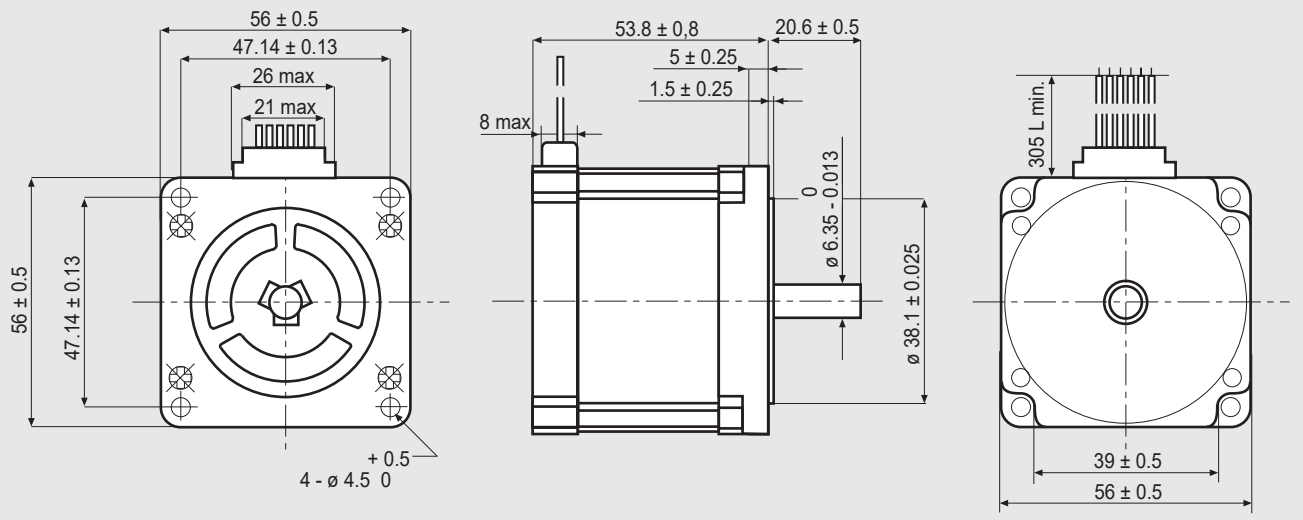

FEATURES

MODEL		103-H7123-0440
BASIC STEP ANGLE		1.8° ± 0.09°
BIPOLAR CURRENT	(Amp)	1.5(*)
UNIPOLAR CURRENT	(Amp)	2.0
RESISTANCE	(Ohm)	1.6
INDUCTANCE	(mH)	3.8
BIPOLAR HOLDING TORQUE	(Ncm)	110
UNIPOLAR HOLDING TORQUE	(Ncm)	85
ROTOR INERTIA	(Kgm ^{2} x 10 $^{-7}$)	210
THEORETICAL ACCELERATION	(rad x sec.$^{-2}$)	50000
BACK E.M.F.	(V/Krpm)	31
MASS	(Kg)	0.65
LEADS CODE		IV

TORQUE/SPEED CURVE

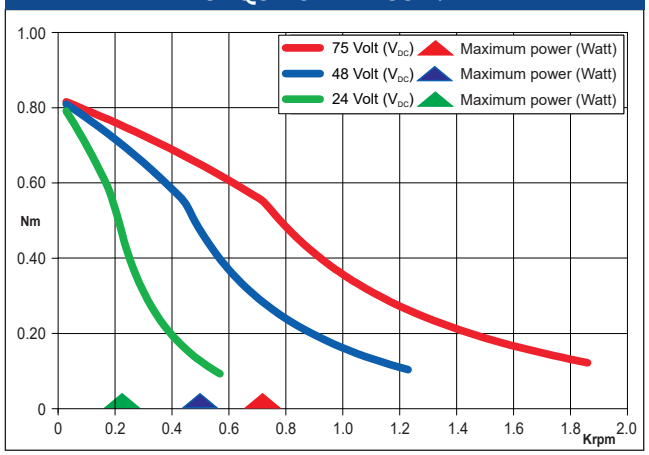

(*) Bipolar series connection.

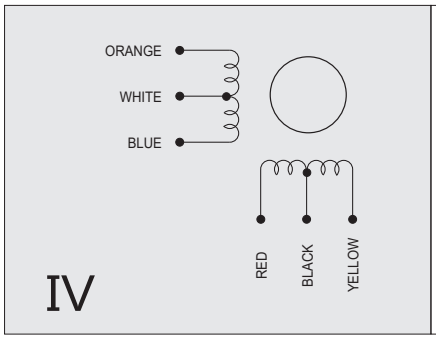

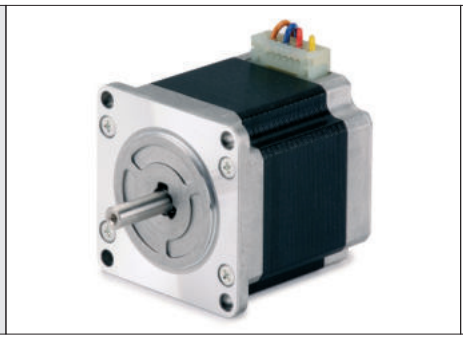

Suggested R.T.A. drive series: BSD, CSD, NDC, ADW, HGD, FLEX-DRIVE

103-H7123-0740

SANYO DENKI
SANMOTION

Dimensions (Unit:mm)

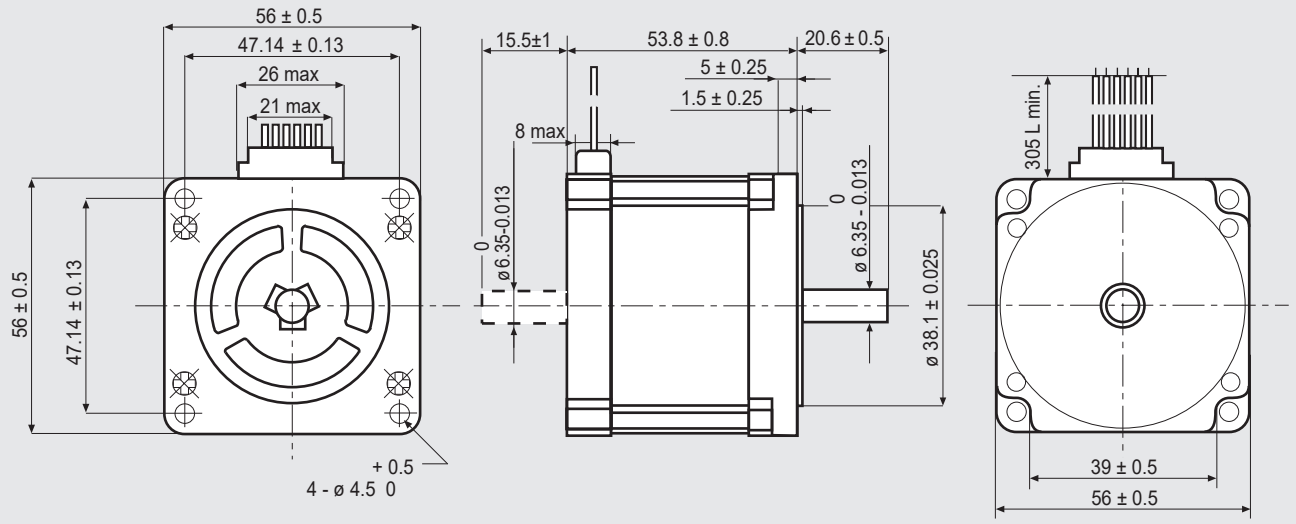

FEATURES

MODEL		103-H7123-0740 (103-H7123-0710)
BASIC STEP ANGLE		1.8° ± 0.09°
BIPOLAR CURRENT	(Amp)	2.2(*)
UNIPOLAR CURRENT	(Amp)	3.0
RESISTANCE	(Ohm)	0.77
INDUCTANCE	(mH)	1.6
BIPOLAR HOLDING TORQUE	(Ncm)	110
UNIPOLAR HOLDING TORQUE	(Ncm)	85
ROTOR INERTIA	(Kgm ^{2} x 10 $^{-7}$)	210
THEORETICAL ACCELERATION	(rad x sec.$^{-2}$)	50000
BACK E.M.F.	(V/Krpm)	20
MASS	(Kg)	0.65
LEADS CODE		IV

Codes between brackets refer to double shaft models.

TORQUE/SPEED CURVE

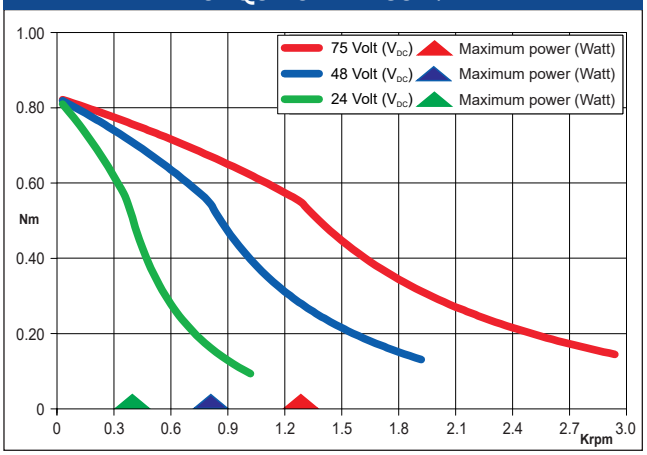

(*) Bipolar series connection.

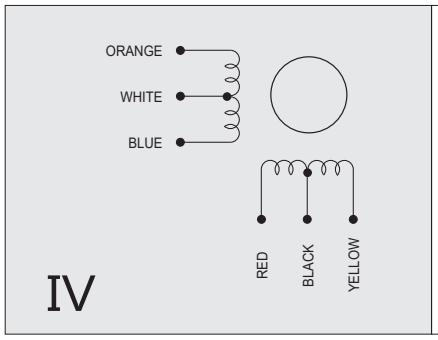

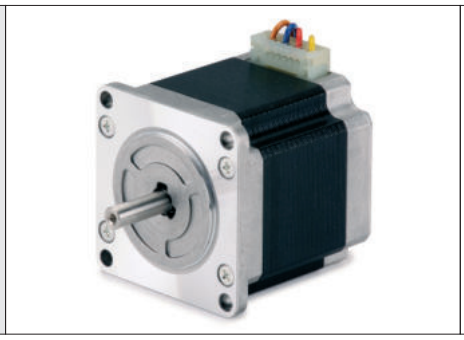

Suggested R.T.A. drive series: BSD, CSD, NDC, ADW, HGD, FLEX-DRIVE

103-H7123-1749

SANYO DENKI
SANMOTION

Dimensions (Unit:mm)

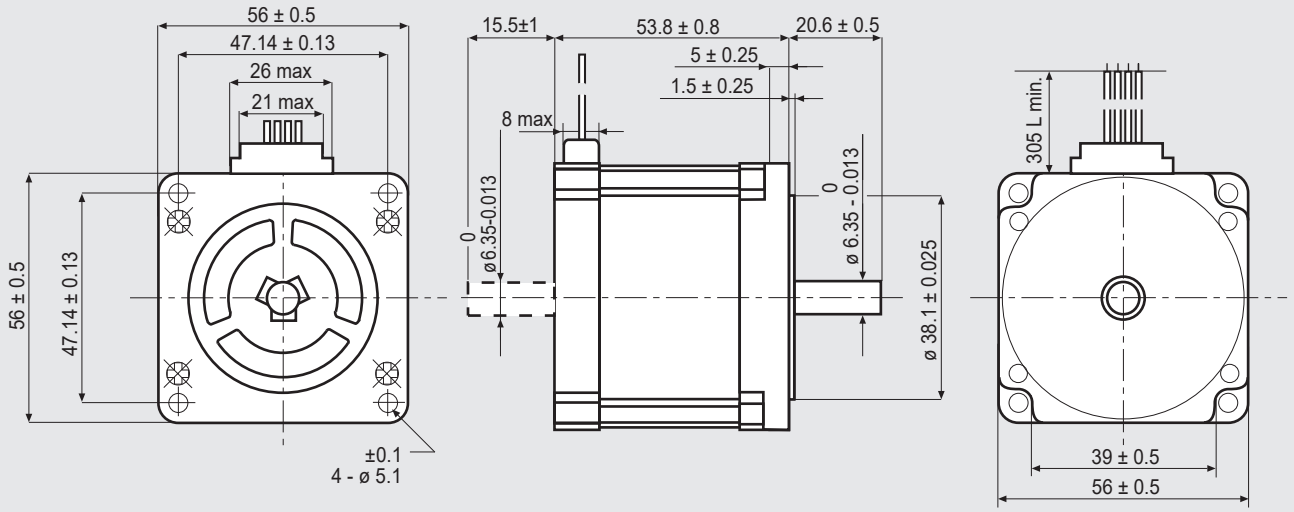

FEATURES

MODEL		103-H7123-1749 (103-H7123-1711)
BASIC STEP ANGLE		1.8° ± 0.09°
BIPOLAR CURRENT	(Amp)	4.0
UNIPOLAR CURRENT	(Amp)	
RESISTANCE	(Ohm)	0.41
INDUCTANCE	(mH)	1.6
BIPOLAR HOLDING TORQUE	(Ncm)	110
UNIPOLAR HOLDING TORQUE	(Ncm)	
ROTOR INERTIA	(Kgm ^{2} x 10 $^{-7}$)	210
THEORETICAL ACCELERATION	(rad x sec.$^{-2}$)	50000
BACK E.M.F.	(V/Krpm)	20
MASS	(Kg)	0.65
LEADS CODE		V

Codes between brackets refer to double shaft models.

TORQUE/SPEED CURVE

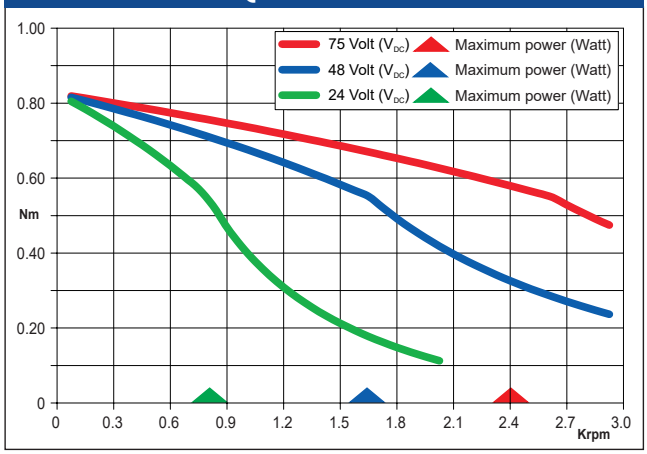

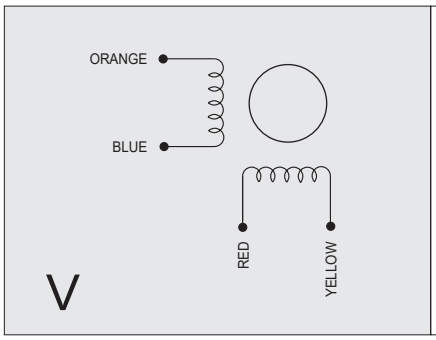

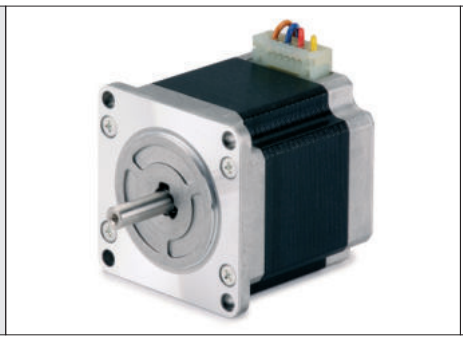

Suggested R.T.A. drive series: BSD, CSD, NDC, ADW, HGD, FLEX-DRIVE

103-H7126-0140

SANYO DENKI
SANMOTION

Dimensions (Unit:mm)

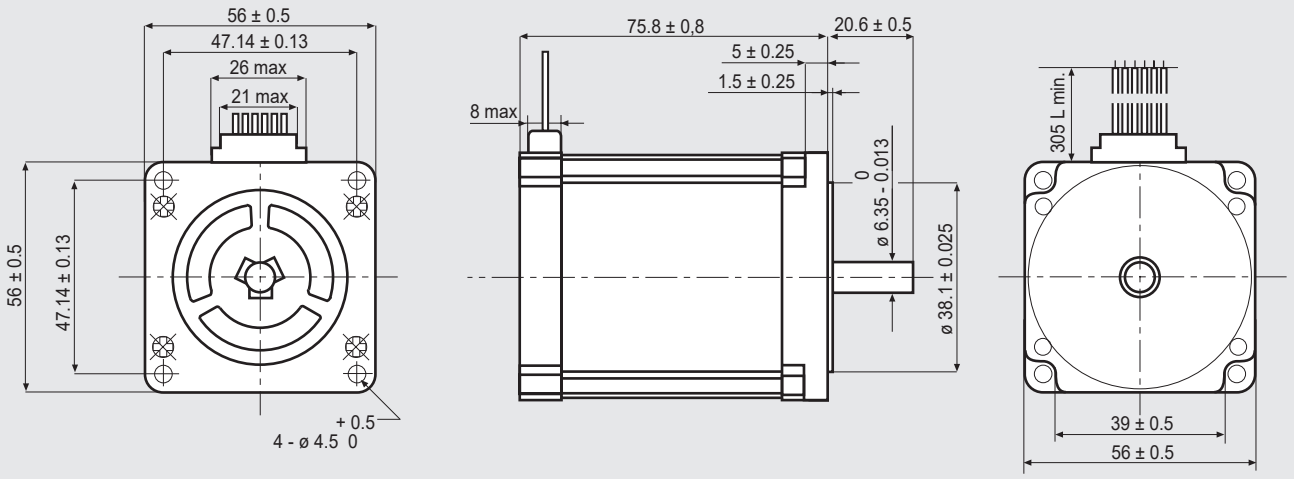

FEATURES

MODEL		103-H7126-0140
BASIC STEP ANGLE		1.8° ± 0.09°
BIPOLAR CURRENT	(Amp)	0.75(*)
UNIPOLAR CURRENT	(Amp)	1.0
RESISTANCE	(Ohm)	8.6
INDUCTANCE	(mH)	19
BIPOLAR HOLDING TORQUE	(Ncm)	165
UNIPOLAR HOLDING TORQUE	(Ncm)	130
ROTOR INERTIA	(Kgm ^{2} x 10 $^{-7}$)	360
THEORETICAL ACCELERATION	(rad x sec.$^{-2}$)	45800
BACK E.M.F.	(V/Krpm)	92
MASS	(Kg)	1
LEADS CODE		IV

TORQUE/SPEED CURVE

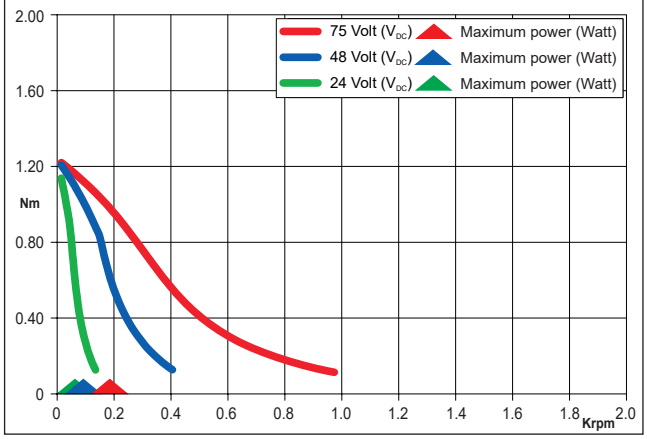

(*)Bipolar series connection.

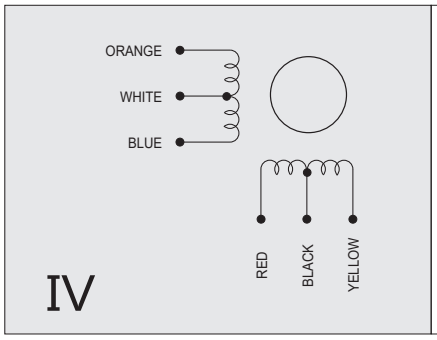

Suggested R.T.A. drive series: BSD, CSD, NDC, ADW, HGD, FLEX-DRIVE

103-H7126-0740

SANYO DENKI
SANMOTION

Dimensions (Unit:mm)

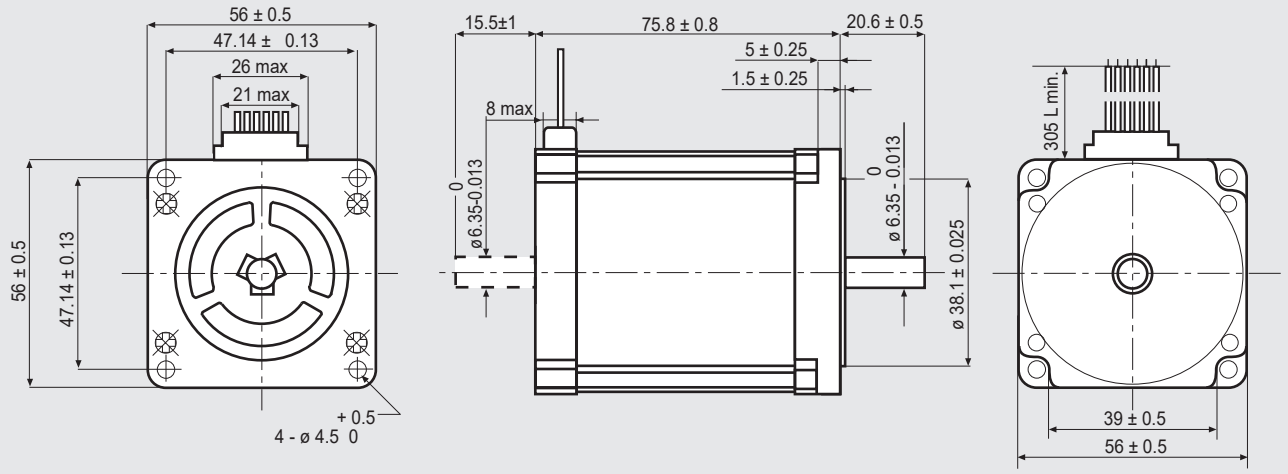

FEATURES

MODEL		103-H7126-0740 (103-H7126-0710)
BASIC STEP ANGLE		1.8° ± 0.09°
BIPOLAR CURRENT	(Amp)	2.2(*)
UNIPOLAR CURRENT	(Amp)	3
RESISTANCE	(Ohm)	0.9
INDUCTANCE	(mH)	2.2
BIPOLAR HOLDING TORQUE	(Ncm)	165
UNIPOLAR HOLDING TORQUE	(Ncm)	130
ROTOR INERTIA	(Kgm ^{2} x 10 $^{-7}$)	360
THEORETICAL ACCELERATION	(rad x sec.$^{-2}$)	45800
BACK E.M.F.	(V/Krpm)	31
MASS	(Kg)	1
LEADS CODE		IV

Codes between brackets refer to double shaft models.

TORQUE/SPEED CURVE

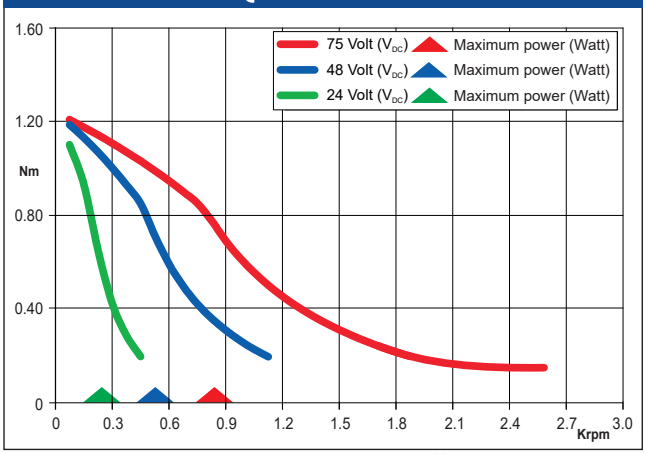

(*)Bipolar series connection.

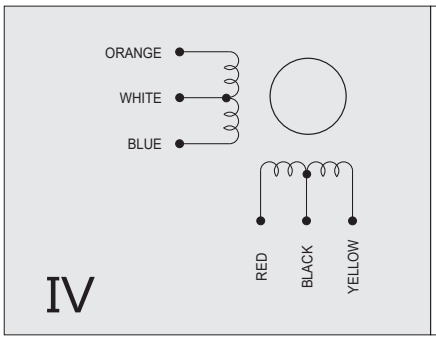

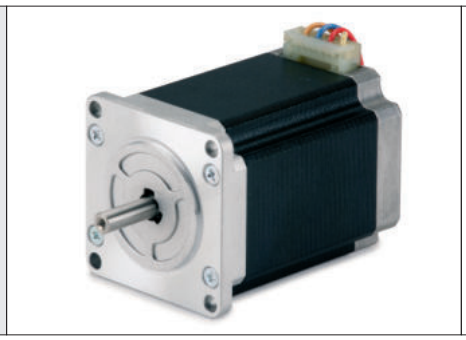

Suggested R.T.A. drive series: BSD, CSD, NDC, ADW, HGD, FLEX-DRIVE

103-H7126-1740

SANYO DENKI
SANMOTION

Dimensions (Unit:mm)

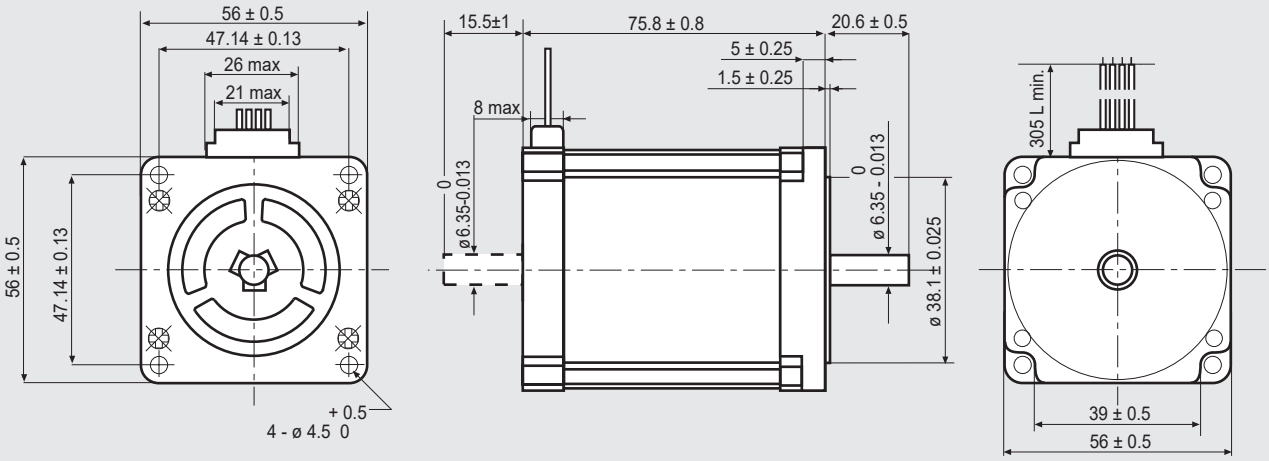

FEATURES

MODEL		103-H7126-1740 (103-H7126-1710)
BASIC STEP ANGLE		1.8° ± 0.09°
BIPOLAR CURRENT	(Amp)	4.0
UNIPOLAR CURRENT	(Amp)	
RESISTANCE	(Ohm)	0.48
INDUCTANCE	(mH)	2.2
BIPOLAR HOLDING TORQUE	(Ncm)	165
UNIPOLAR HOLDING TORQUE	(Ncm)	
ROTOR INERTIA	(Kgm ^{2} x 10 $^{-7}$)	360
THEORETICAL ACCELERATION	(rad x sec.$^{-2}$)	45800
BACK E.M.F.	(V/Krpm)	31
MASS	(Kg)	1
LEADS CODE		V

Codes between brackets refer to double shaft models.

TORQUE/SPEED CURVE

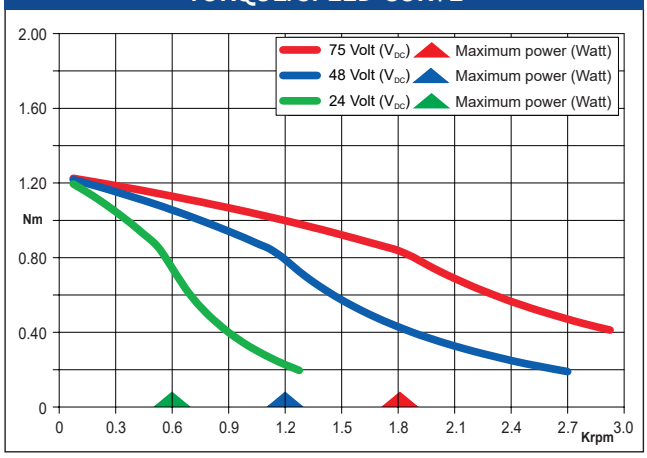

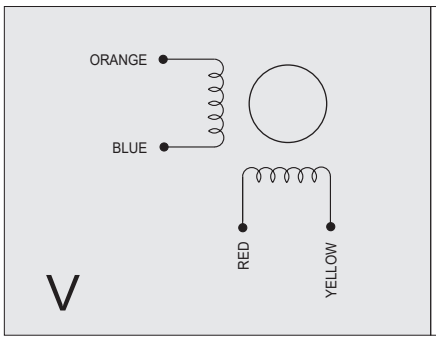

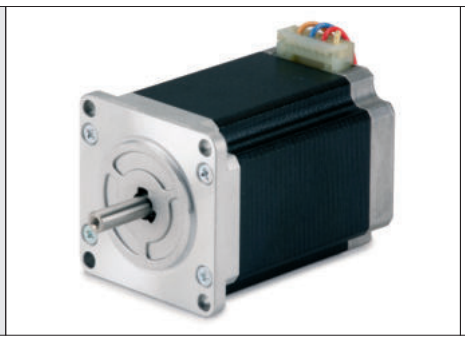

Suggested R.T.A. drive series: BSD, CSD, NDC, ADW, HGD, FLEX-DRIVE

103-H7126-6640

SANYO DENKI
SANMOTION

Dimensions (Unit:mm)

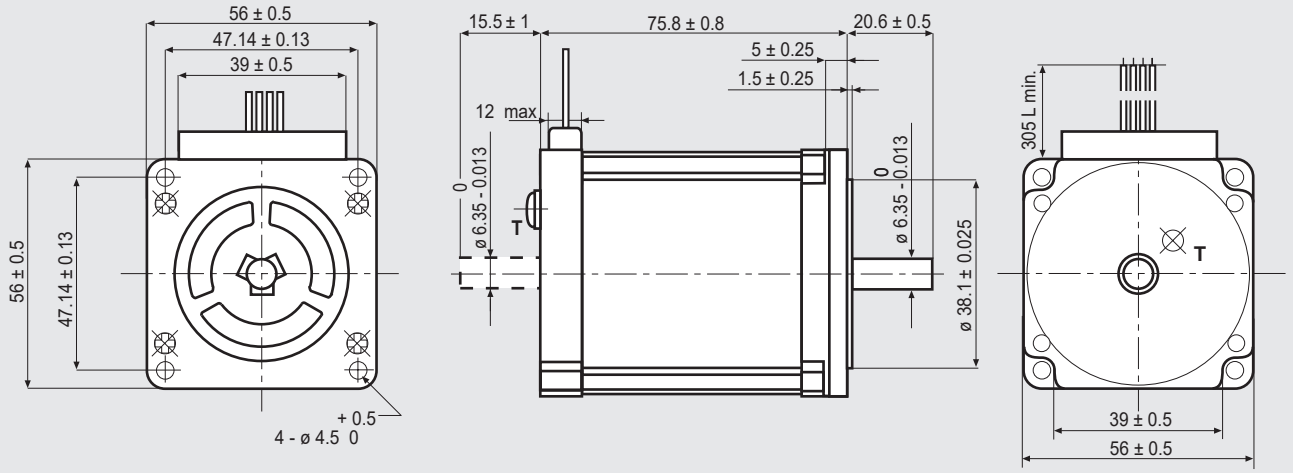

T IS THE EARTH TERMINAL

FEATURES

MODEL		103-H7126-6640 (103-H7126-6610)
BASIC STEP ANGLE		1.8° ± 0.09°
BIPOLAR CURRENT	(Amp)	5.6
UNIPOLAR CURRENT	(Amp)	
RESISTANCE	(Ohm)	0.3
INDUCTANCE	(mH)	0.85
BIPOLAR HOLDING TORQUE	(Ncm)	165
UNIPOLAR HOLDING TORQUE	(Ncm)	
ROTOR INERTIA	(Kgm ^{2} x 10 $^{-7}$)	360
THEORETICAL ACCELERATION	(rad x sec.$^{-2}$)	45800
BACK E.M.F.	(V/Krpm)	23
MASS	(Kg)	1
PROTECTION DEGREE		IP43
LEADS CODE		V

Codes between brackets refer to double shaft models.

TORQUE/SPEED CURVE

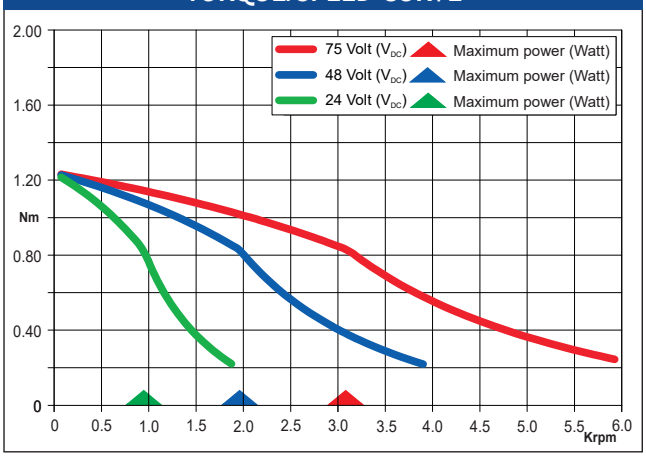

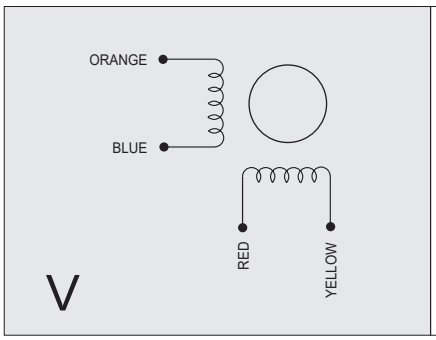

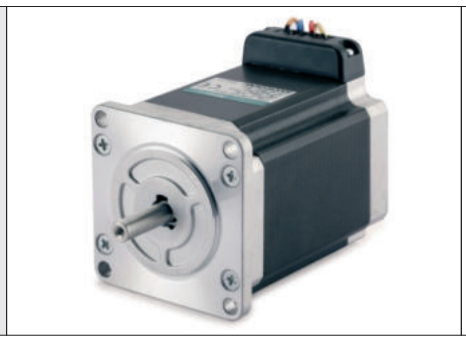

Suggested R.T.A. drive series: NDC, ADW, HGD, PLUS

103-H7128-5740

SANYO DENKI
SANMOTION

Dimensions (Unit:mm)

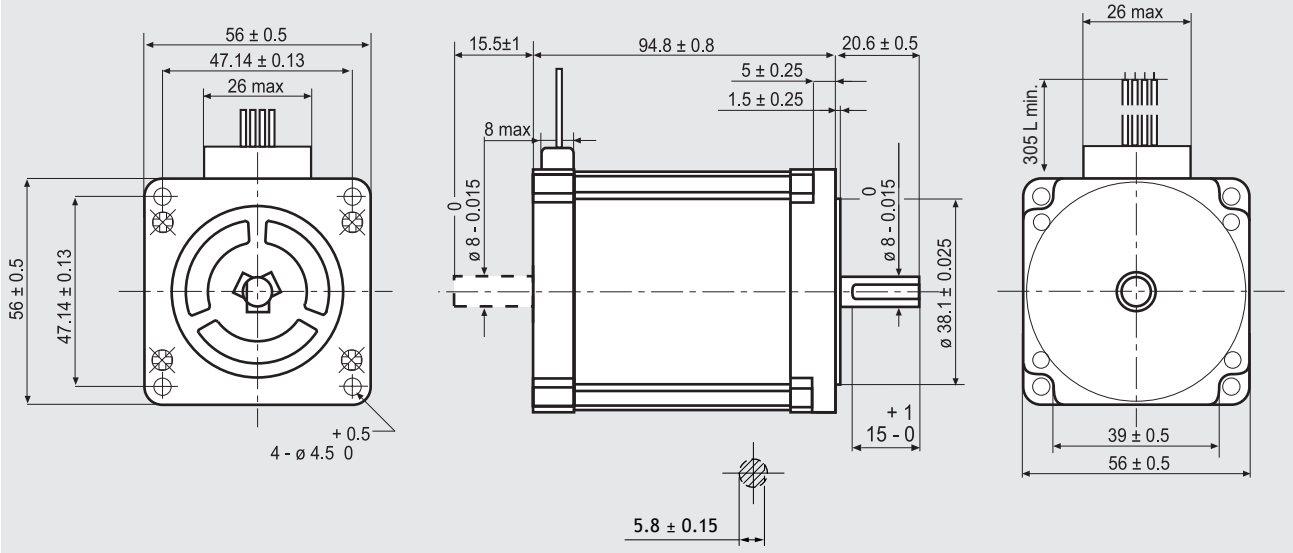

FEATURES

MODEL		103-H7128-5740 (103-H7128-5710)
BASIC STEP ANGLE		1.8° ± 0.09°
BIPOLAR CURRENT	(Amp)	2
UNIPOLAR CURRENT	(Amp)	
RESISTANCE	(Ohm)	2.3
INDUCTANCE	(mH)	10.4
BIPOLAR HOLDING TORQUE	(Ncm)	200
UNIPOLAR HOLDING TORQUE	(Ncm)	
ROTOR INERTIA	(Kgm ^{2} x 10 $^{-7}$)	490
THEORETICAL ACCELERATION	(rad x sec.$^{-2}$)	40816
BACK E.M.F.	(V/Krpm)	53.3
MASS	(Kg)	1.3
LEADS CODE		V

Codes between brackets refer to double shaft models.

TORQUE/SPEED CURVE

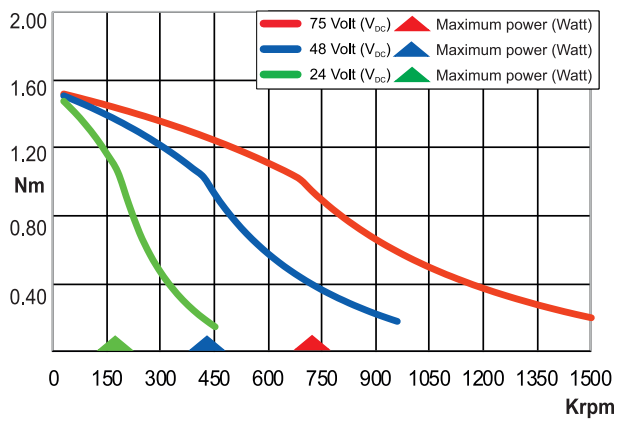

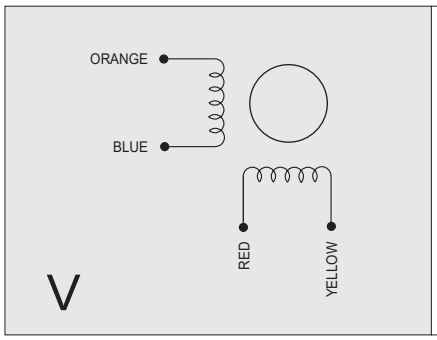

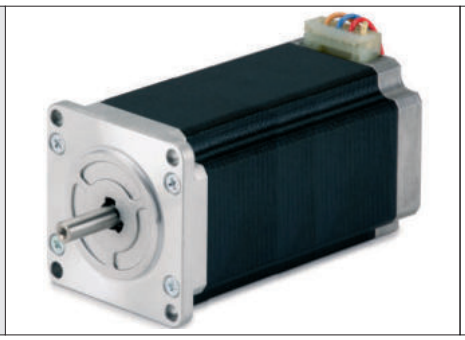

Suggested R.T.A. drive series: BSD, CSD, NDC, ADW, HGD, FLEX-DRIVE

103-H7822-0740

SANYO DENKI
SANMOTION

Dimensions (Unit:mm)

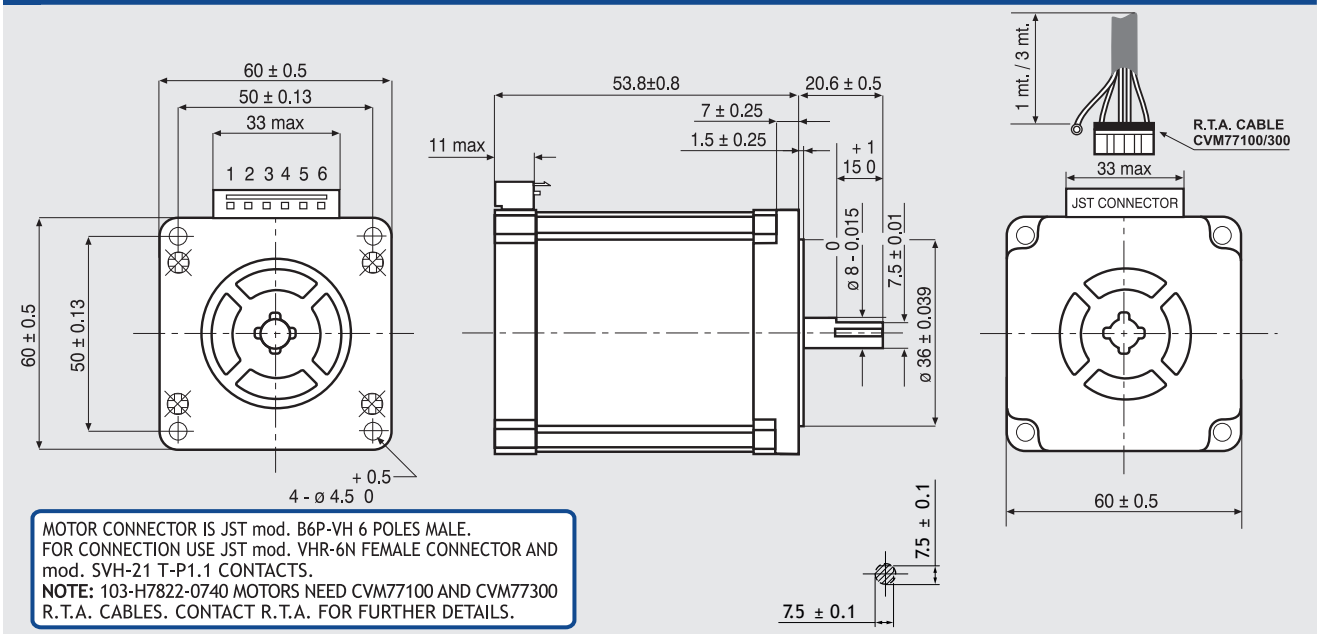

MOTOR CONNECTOR IS JST mod. B6P-VH 6 POLES MALE.
FOR CONNECTION USE JST mod. VHR-6N FEMALE CONNECTOR AND mod. SVH-21 T-P1.1 CONTACTS.
NOTE: 103-H7822-0740 MOTORS NEED CVM77100 AND CVM77300 R.T.A. CABLES. CONTACT R.T.A. FOR FURTHER DETAILS.

FEATURES

MODEL		103-H7822-0740
BASIC STEP ANGLE		1.8° ± 0.09°
BIPOLAR CURRENT	(Amp)	2.2 (*)
UNIPOLAR CURRENT	(Amp)	3.0
RESISTANCE	(Ohm)	0.8
INDUCTANCE	(mH)	1.38
BIPOLAR HOLDING TORQUE	(Ncm)	170
UNIPOLAR HOLDING TORQUE	(Ncm)	125
ROTOR INERTIA	(Kgm ^{2} x 10 $^{-7}$)	400
THEORETICAL ACCELERATION	(rad x sec.$^{-2}$)	42500
BACK E.M.F.	(V/Krpm)	77
MASS	(Kg)	0.8
LEADS CODE		IV

TORQUE/SPEED CURVE

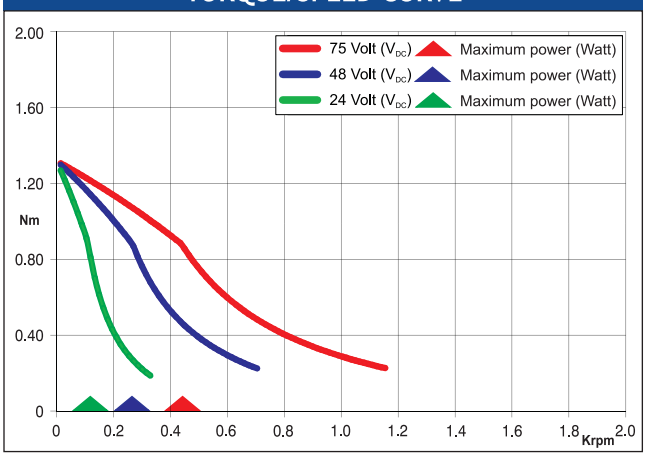

(*) Bipolar series connection.

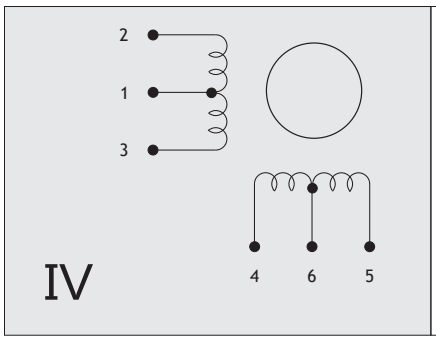

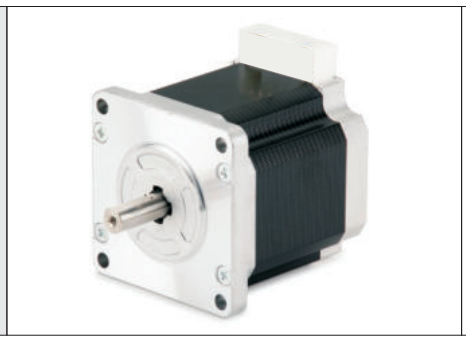

Suggested R.T.A. drive series: BSD, CSD, NDC, ADW, FLEX-DRIVE

103-H7822-1731

Dimensions (Unit:mm)

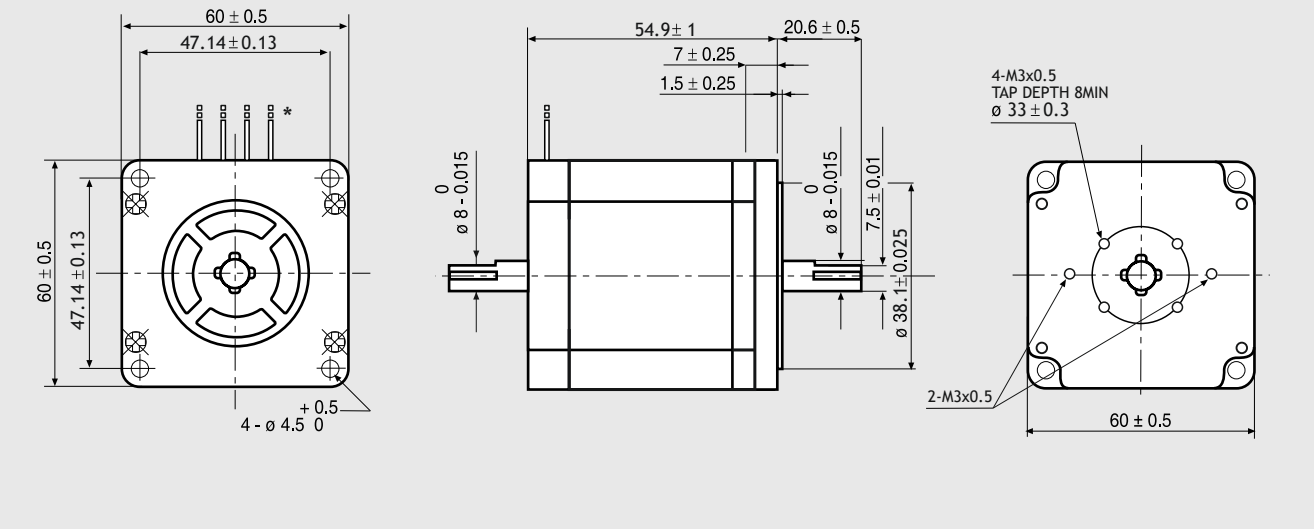

SANYO DENKY FEATURES

MODEL		103-H7822-1731
SANYO DENKI MOTOR CODE		103-H7822-1731
BASIC STEP ANGLE		1.8° ± 0.09°
BIPOLAR PARALLEL CURRENT	(A)	4.0
UNIPOLAR PARALLEL CURRENT	(A)	
RESISTANCE	(Ohm)	0.43
INDUCTANCE	(mH)	1.38
BIPOLAR HOLDING TORQUE	(Ncm)	137
UNIPOLAR HOLDING TORQUE	(Ncm)	
ROTOR INERTIA	($Kgm^2 \times 10^{-7}$)	400
THEORETICAL ACCELERATION	(rad × $sec.^{-2}$)	34200
BACK E.M.F.	(V/Krpm)	43
MASS	(Kg)	1.1

TORQUE/SPEED CURVE

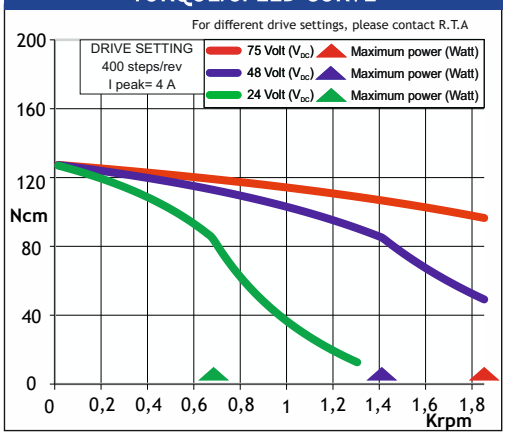

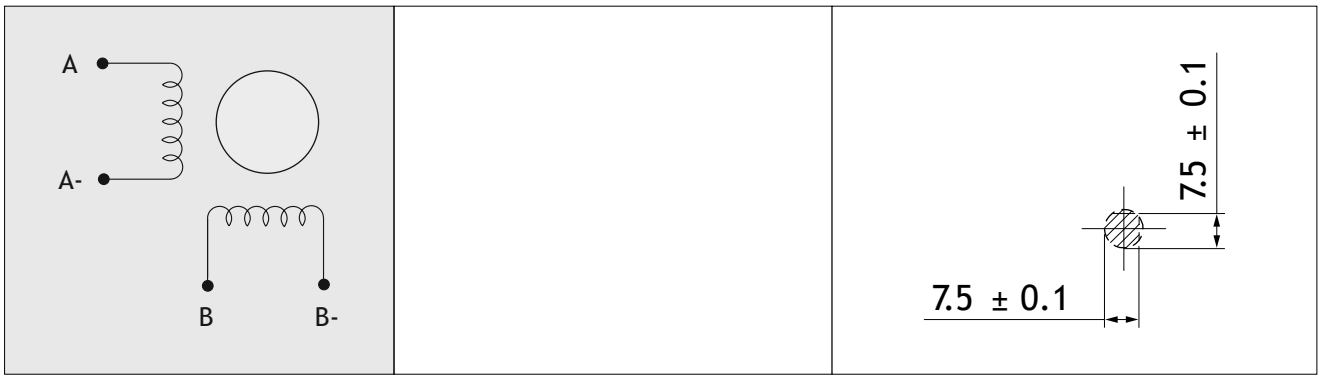

Suggested R.T.A. drive series: BSD, CSD, NDC, ADW, FLEX-DRIVE

103-H7823-0740

SANYO DENKI
SANMOTION

Dimensions (Unit:mm)

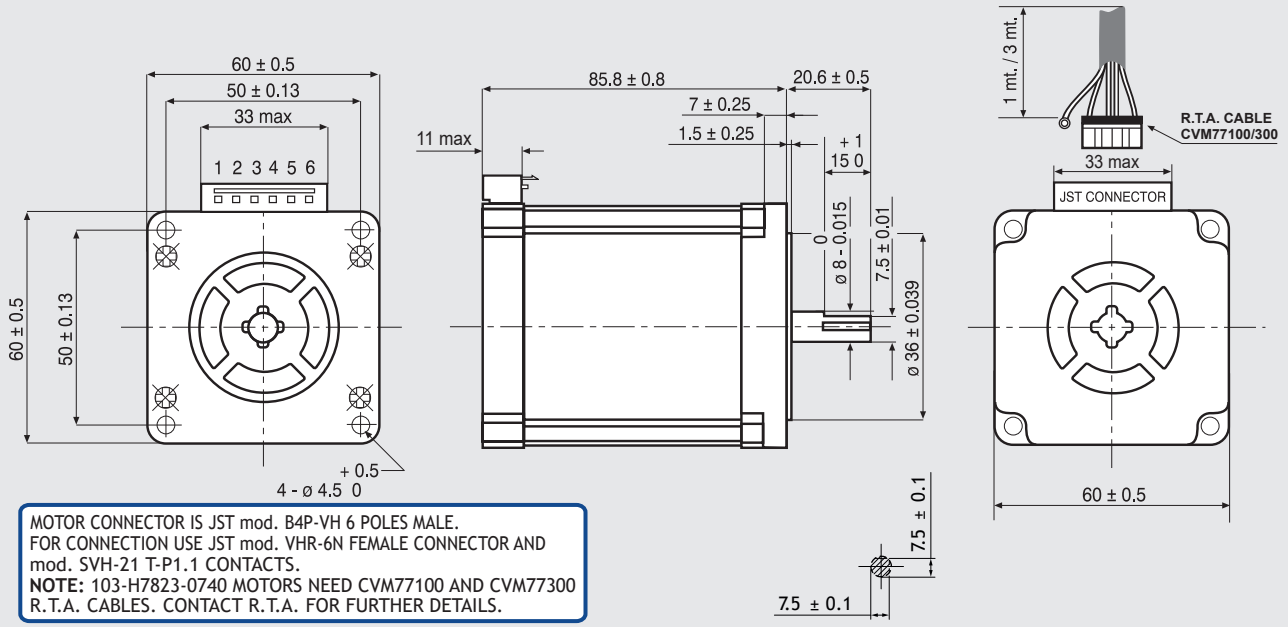

MOTOR CONNECTOR IS JST mod. B4P-VH 6 POLES MALE.
FOR CONNECTION USE JST mod. VHR-6N FEMALE CONNECTOR AND mod. SVH-21 T-P1.1 CONTACTS.
NOTE: 103-H7823-0740 MOTORS NEED CVM77100 AND CVM77300 R.T.A. CABLES. CONTACT R.T.A. FOR FURTHER DETAILS.

FEATURES

MODEL		103-H7823-0740
BASIC STEP ANGLE		1.8° ± 0.09°
BIPOLAR CURRENT	(Amp)	2.2(*)
UNIPOLAR CURRENT	(Amp)	3.0
RESISTANCE	(Ohm)	1.25
INDUCTANCE	(mH)	2.4
BIPOLAR HOLDING TORQUE	(Ncm)	300
UNIPOLAR HOLDING TORQUE	(Ncm)	240
ROTOR INERTIA	(Kgm ^{2} x 10 $^{-7}$)	840
THEORETICAL ACCELERATION	(rad x sec.$^{-2}$)	35700
BACK E.M.F.	(V/Krpm)	55
MASS	(Kg)	1.4
LEADS CODE		IV

TORQUE/SPEED CURVE

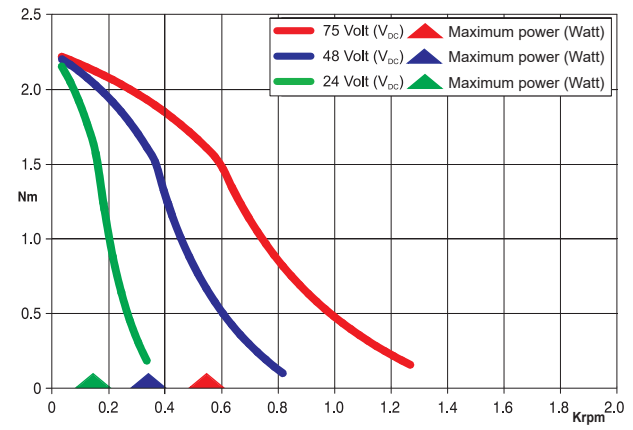

(*) Bipolar series connection.

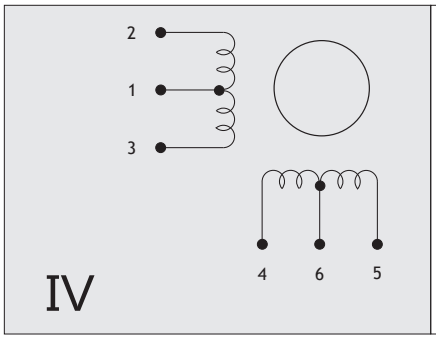

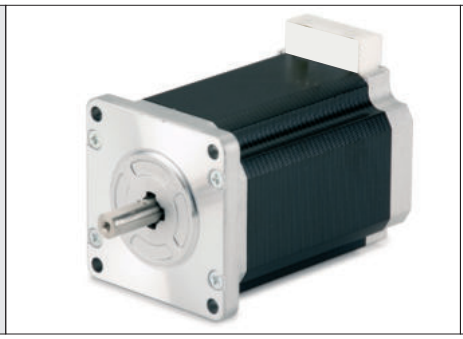

Suggested R.T.A. drive series: BSD, CSD, NDC, ADW, HGD, PLUS, FLEX-DRIVE

103-H7823-1740

SANYO DENKI
SANMOTION

Dimensions (Unit:mm)

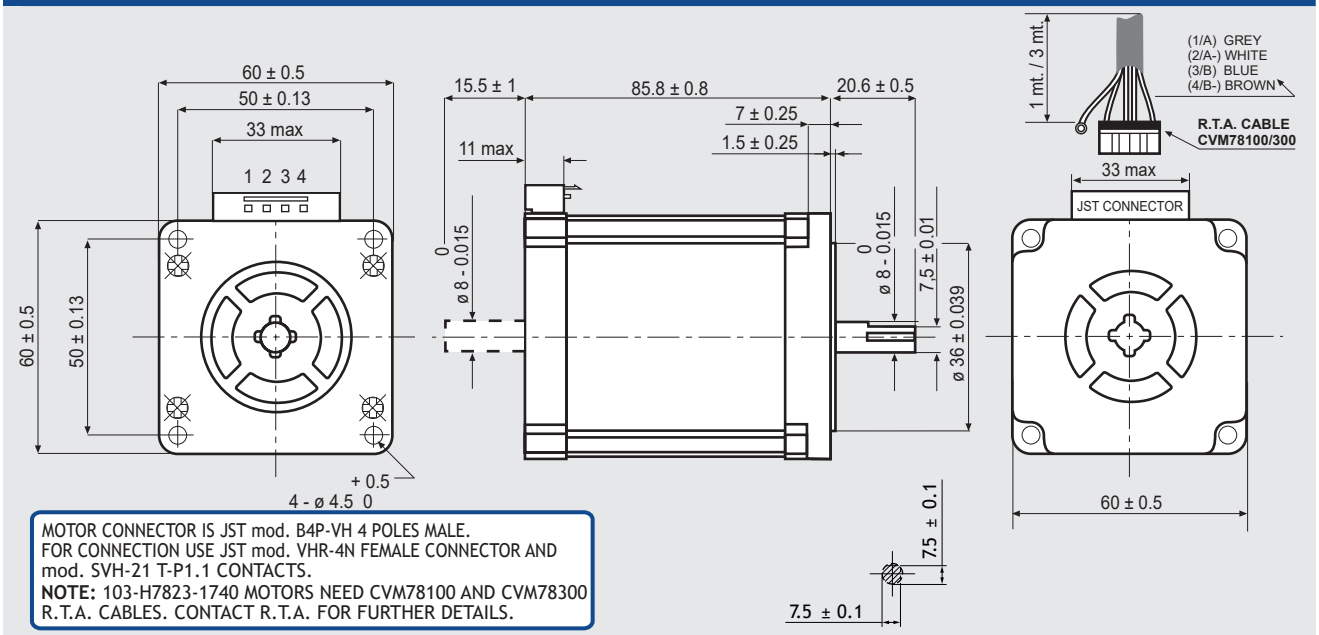

MOTOR CONNECTOR IS JST mod. B4P-VH 4 POLES MALE.
FOR CONNECTION USE JST mod. VHR-4N FEMALE CONNECTOR AND mod. SVH-21 T-P1.1 CONTACTS.
NOTE: 103-H7823-1740 MOTORS NEED CVM78100 AND CVM78300 R.T.A. CABLES. CONTACT R.T.A. FOR FURTHER DETAILS.

FEATURES

MODEL		103-H7823-1740 (103-H7823-1714)
BASIC STEP ANGLE		1.8° ± 0.09°
BIPOLAR CURRENT	(Amp)	4.0
UNIPOLAR CURRENT	(Amp)	
RESISTANCE	(Ohm)	0.65
INDUCTANCE	(mH)	2.4
BIPOLAR HOLDING TORQUE	(Ncm)	300
UNIPOLAR HOLDING TORQUE	(Ncm)	
ROTOR INERTIA	(Kgm ^{2} x 10 $^{-7}$)	840
THEORETICAL ACCELERATION	(rad x sec.$^{-2}$)	35700
BACK E.M.F.	(V/Krpm)	75
MASS	(Kg)	1.4
LEADS CODE		V

Codes between brackets refer to double shaft models.

TORQUE/SPEED CURVE

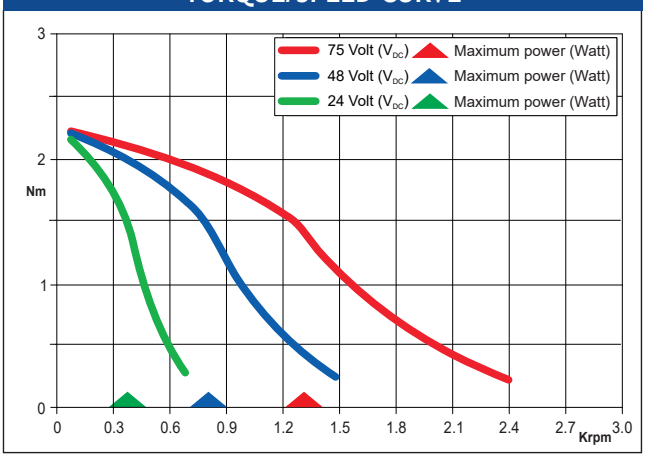

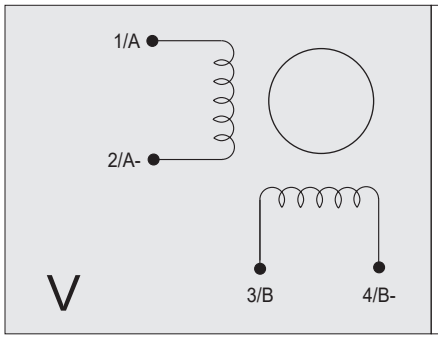

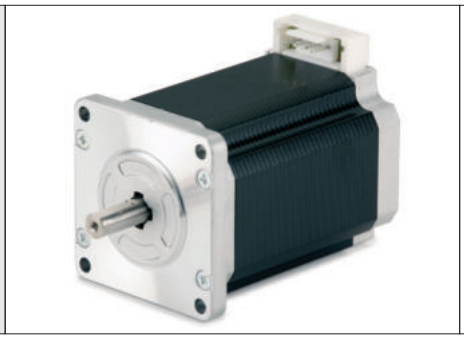

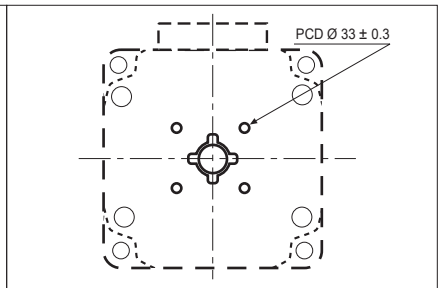

DOUBLE SHAFT MOTORS ONLY.
4-M3X0.5 THREATED HOLES. TAP DEPTH 8 mm.

Suggested R.T.A. drive series: BSD, CSD, NDC, ADW, HGD, PLUS, FLEX-DRIVE

103-H7826-1642

SANYO DENKI
SANMOTION

Dimensions (Unit:mm)

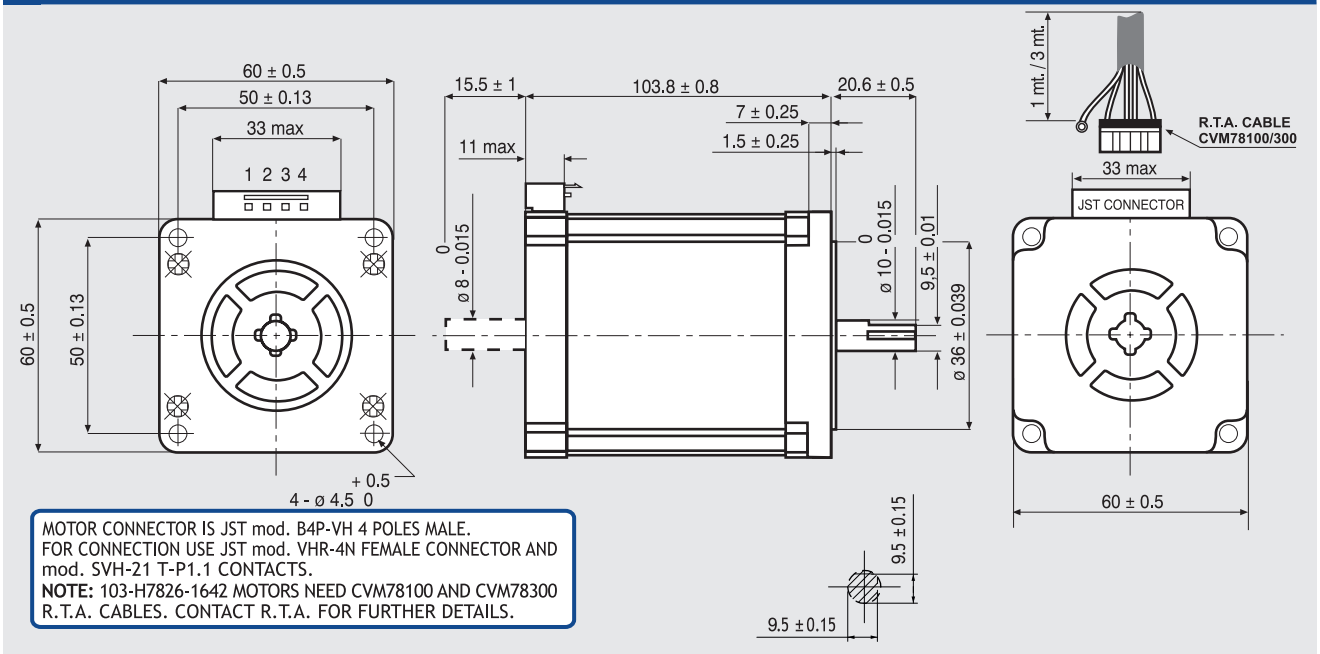

MOTOR CONNECTOR IS JST mod. B4P-VH 4 POLES MALE.
FOR CONNECTION USE JST mod. VHR-4N FEMALE CONNECTOR AND mod. SVH-21 T-P1.1 CONTACTS.
NOTE: 103-H7826-1642 MOTORS NEED CVM78100 AND CVM78300 R.T.A. CABLES. CONTACT R.T.A. FOR FURTHER DETAILS.

FEATURES

MODEL		103-H7826-1642 (103-H7826-1612)
BASIC STEP ANGLE		1.8° ± 0.09°
BIPOLAR CURRENT	(Amp)	6.0
UNIPOLAR CURRENT	(Amp)	
RESISTANCE	(Ohm)	0.43
INDUCTANCE	(mH)	1.45
BIPOLAR HOLDING TORQUE	(Ncm)	380
UNIPOLAR HOLDING TORQUE	(Ncm)	
ROTOR INERTIA	(Kgm ^{2} x 10 $^{-7}$)	1080
THEORETICAL ACCELERATION	(rad x sec.$^{-2}$)	35200
BACK E.M.F.	(V/Krpm)	70
MASS	(Kg)	1.65
LEADS CODE		V

Codes between brackets refer to double shaft models.

TORQUE/SPEED CURVE

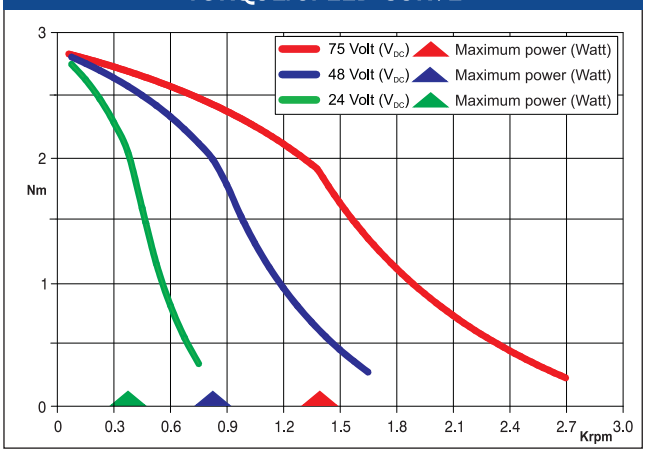

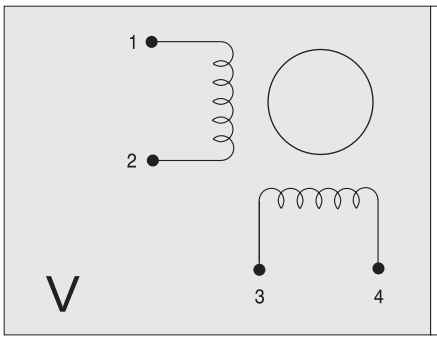

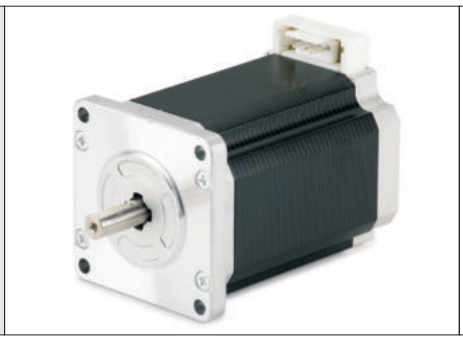

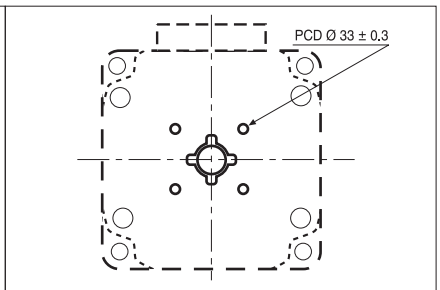

DOUBLE SHAFT MOTORS ONLY.
4-M3X0.5 THREATED HOLES. TAP DEPTH 8 mm.

Suggested R.T.A. drive series: NDC, ADW, HGD, PLUS

SM 2861-5055

SANYO DENKI
SANMOTION

Dimensions (Unit:mm)

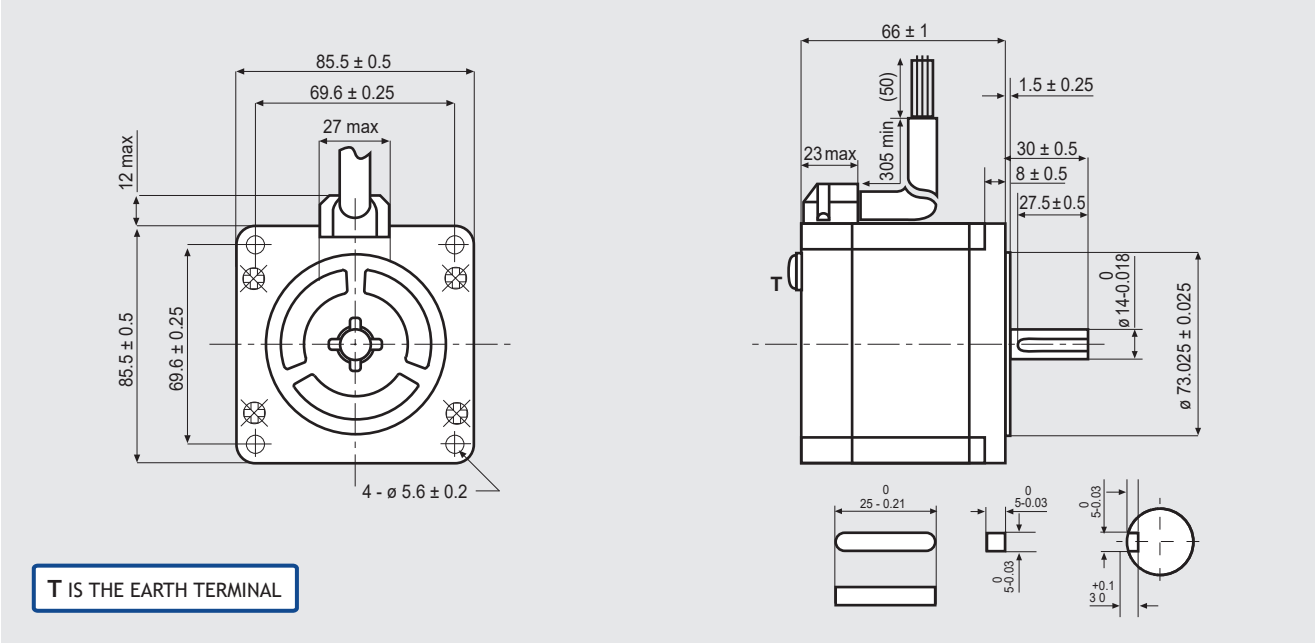

T IS THE EARTH TERMINAL

FEATURES

MODEL		SM 2861-5055 (SM 2861-5025)
BASIC STEP ANGLE		1.8° ± 0.09°
BIPOLAR CURRENT	(Amp)	2.0
RESISTANCE	(Ohm)	2.2
INDUCTANCE	(mH)	15
BIPOLAR HOLDING TORQUE	(Ncm)	360
ROTOR INERTIA	(Kgm ^{2} x 10 $^{-7}$)	1480
THEORETICAL ACCELERATION	(rad x sec.$^{-2}$)	24300
BACK E.M.F.	(V/Krpm)	180
MASS	(Kg)	1.7
INTERNATIONAL STANDARDS		UL, CSA
INSULATION VOLTAGE	(V)	250 VAC (350 VDC)
PROTECTION DEGREE		IP43-F
LEADS CODE		V

Codes between brackets refer to double shaft models.

TORQUE/SPEED CURVE

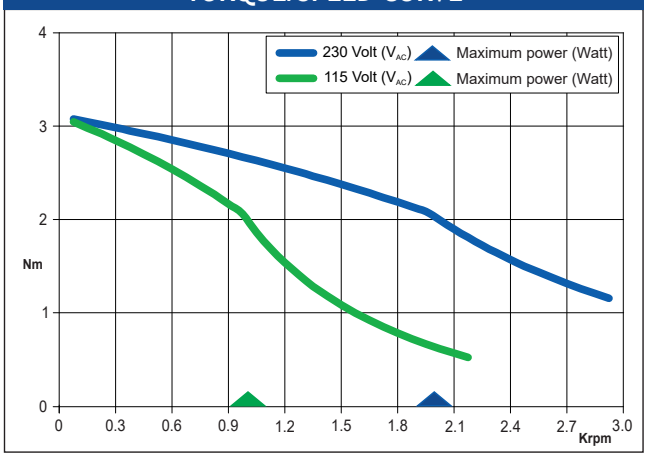

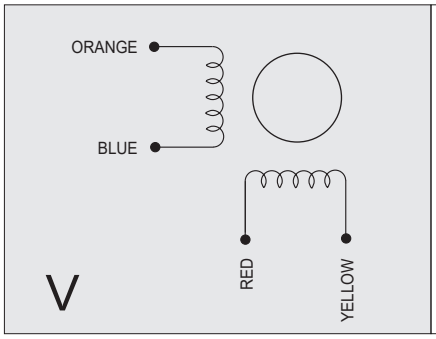

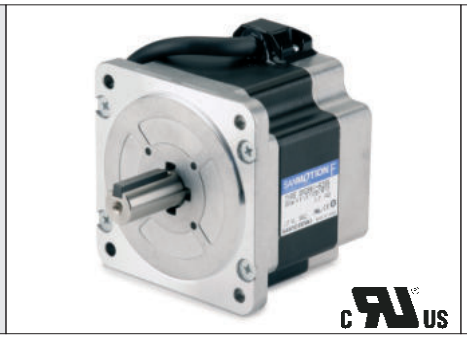

Suggested R.T.A. drive model: X-PLUS L2

SM 2861-5255

SANYO DENKI
SANMOTION

Dimensions (Unit:mm)

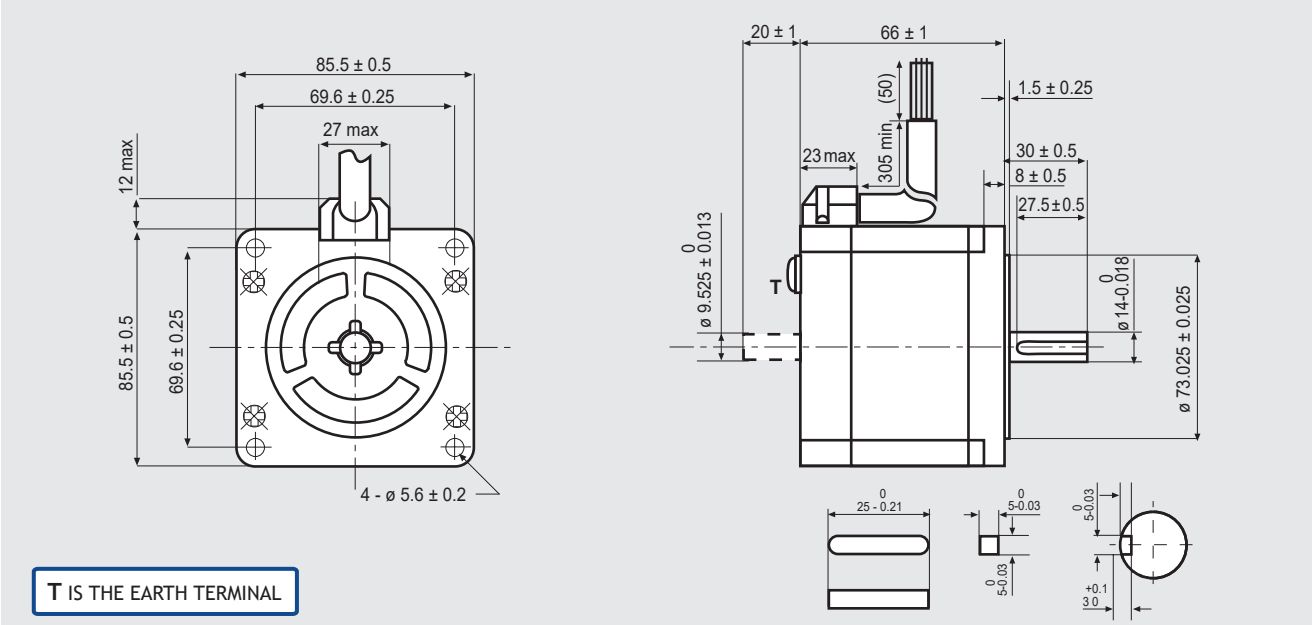

T IS THE EARTH TERMINAL

FEATURES

MODEL		SM 2861-5255 (SM 2861-5225)
BASIC STEP ANGLE		1.8° ± 0.09°
BIPOLAR CURRENT	(Amp)	6.0
RESISTANCE	(Ohm)	0.29
INDUCTANCE	(mH)	1.7
BIPOLAR HOLDING TORQUE	(Ncm)	360
ROTOR INERTIA	(Kgm ^{2} x 10 $^{-7}$)	1480
THEORETICAL ACCELERATION	(rad x sec.$^{-2}$)	24300
BACK E.M.F.	(V/Krpm)	60
MASS	(Kg)	1.7
INTERNATIONAL STANDARDS		UL, CSA
INSULATION VOLTAGE	(V)	250 VAC (350 VDC)
PROTECTION DEGREE		IP43-F
LEADS CODE		V

Codes between brackets refer to double shaft models.

TORQUE/SPEED CURVE

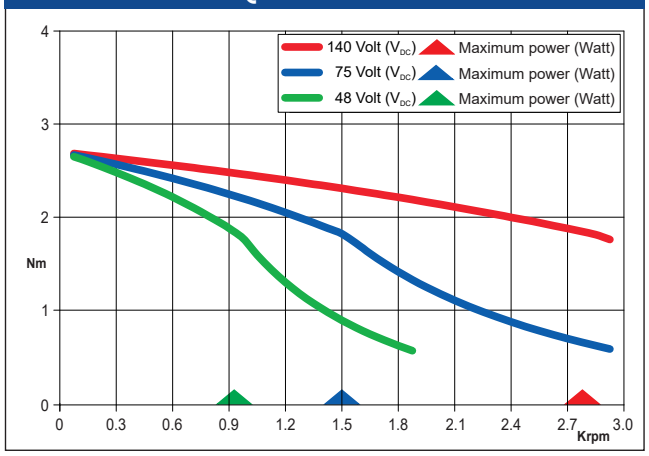

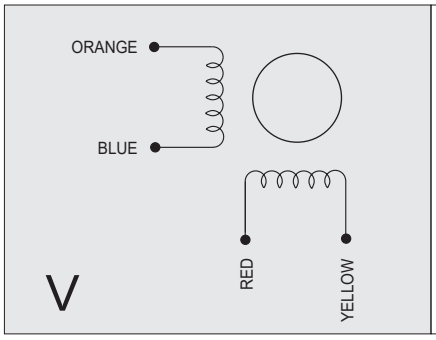

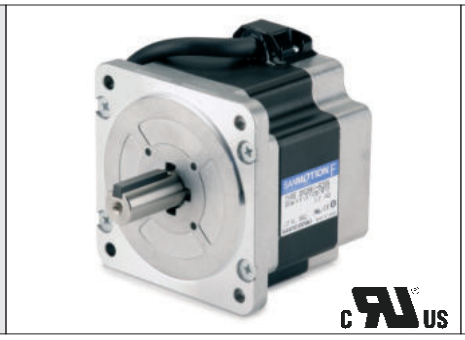

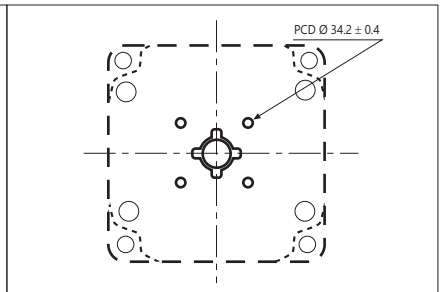

DOUBLE SHAFT MOTORS ONLY.
4 X M4 THREATED HOLES. TAP DEPTH 4.5 mm.

Suggested R.T.A. drive series: NDC, ADW, HGD, PLUS

SM 2862-5055

SANYO DENKI
SANMOTION

Dimensions (Unit:mm)

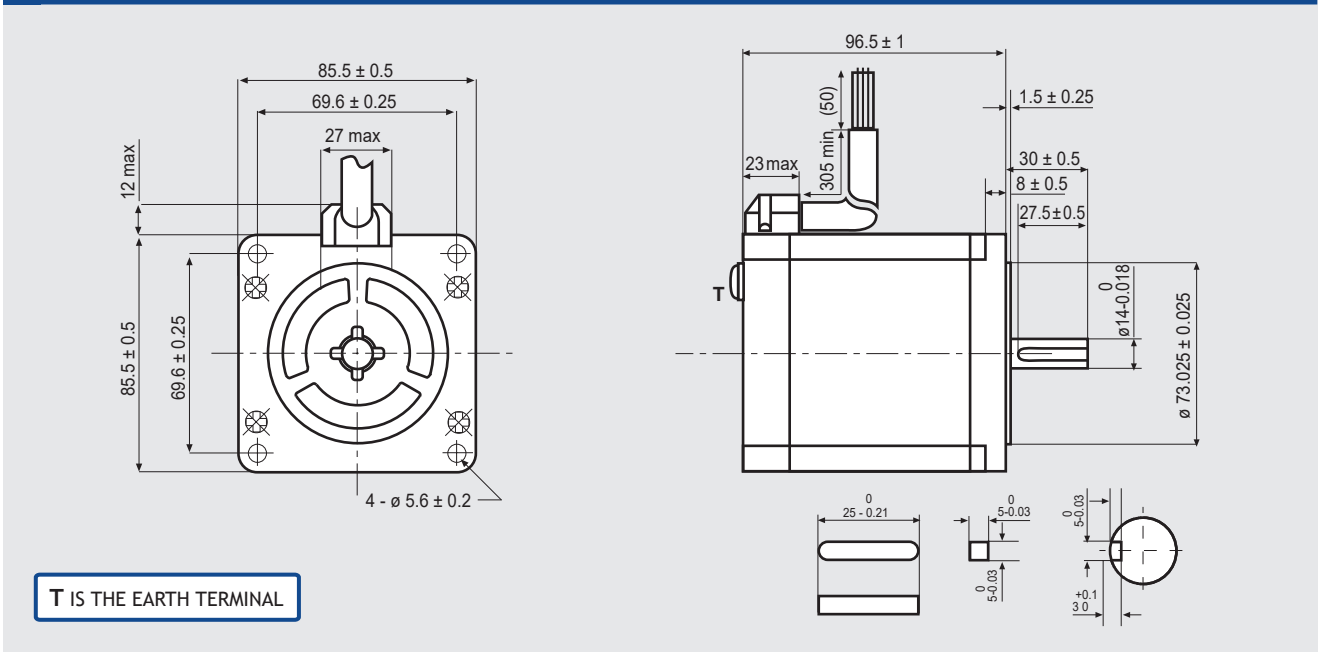

T IS THE EARTH TERMINAL

FEATURES

MODEL		SM 2862-5055
BASIC STEP ANGLE		1.8° ± 0.09°
BIPOLAR CURRENT	(Amp)	2.0
RESISTANCE	(Ohm)	3.2
INDUCTANCE	(mH)	25
BIPOLAR HOLDING TORQUE	(Ncm)	700
ROTOR INERTIA	(Kgm ^{2} x 10 $^{-7}$)	3000
THEORETICAL ACCELERATION	(rad x sec.$^{-2}$)	23300
BACK E.M.F.	(V/Krpm)	350
MASS	(Kg)	2.9
INTERNATIONAL STANDARDS		UL, CSA
INSULATION VOLTAGE	(V)	250 VAC (350 VDC)
PROTECTION DEGREE		IP43-F
LEADS CODE		V

TORQUE/SPEED CURVE

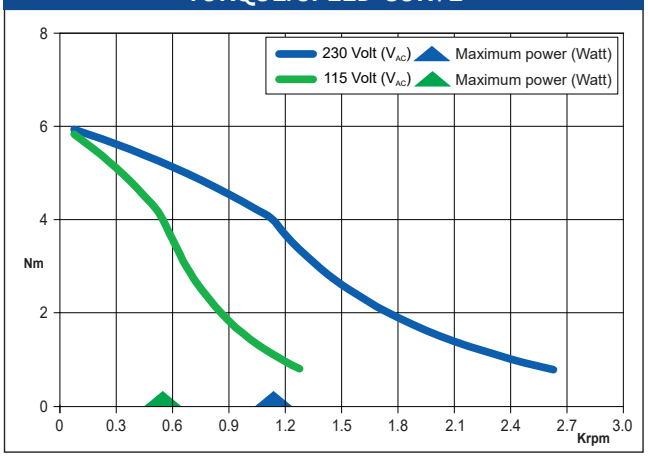

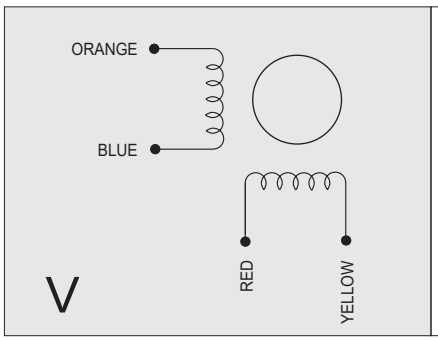

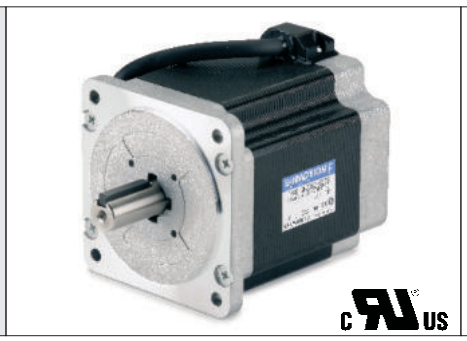

Suggested R.T.A. drive series: 230 Vac X-PLUS

SM 2862-5155

SANYO DENKI
SANMOTION

Dimensions (Unit:mm)

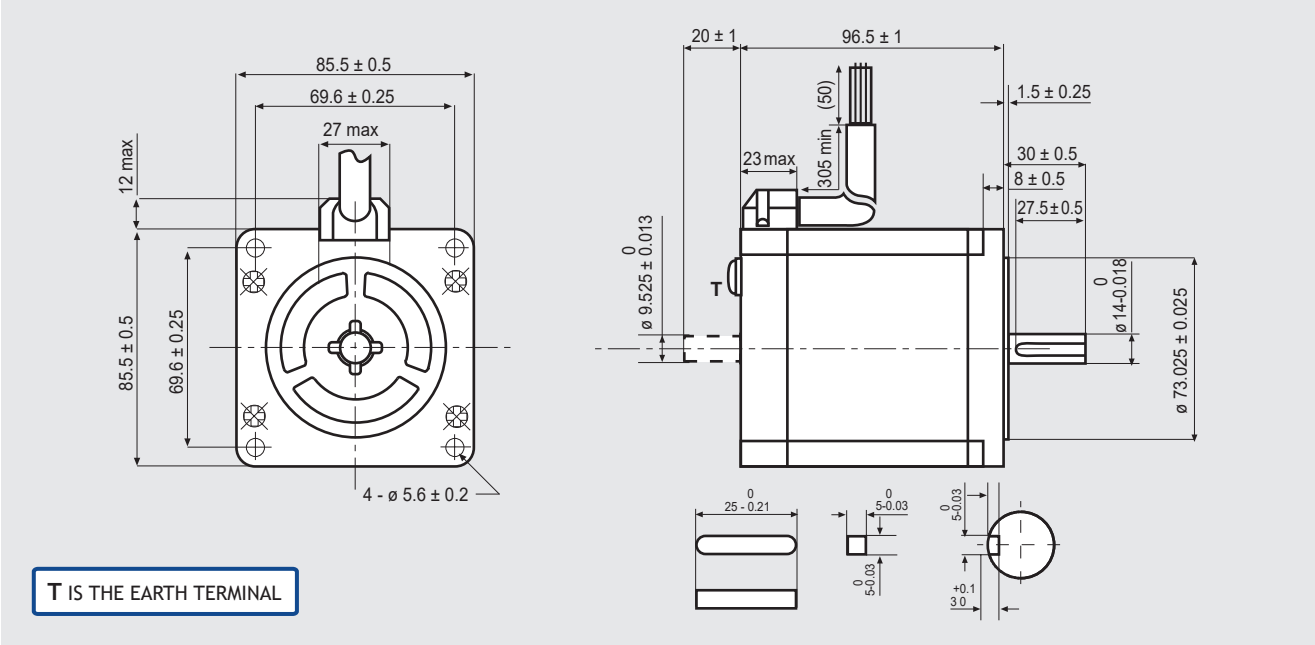

T IS THE EARTH TERMINAL

FEATURES

MODEL		SM 2862-5155 (SM 2862-5125)
BASIC STEP ANGLE		1.8° ± 0.09°
BIPOLAR CURRENT	(Amp)	4.0
RESISTANCE	(Ohm)	0.83
INDUCTANCE	(mH)	6.4
BIPOLAR HOLDING TORQUE	(Ncm)	700
ROTOR INERTIA	(Kgm ^{2} x 10 $^{-7}$)	3000
THEORETICAL ACCELERATION	(rad x sec.$^{-2}$)	23300
BACK E.M.F.	(V/Krpm)	175
MASS	(Kg)	2.9
INTERNATIONAL STANDARDS		UL, CSA
INSULATION VOLTAGE	(V)	250 VAC (350 VDC)
PROTECTION DEGREE		IP43-F
LEADS CODE		V

Codes between brackets refer to double shaft models.

TORQUE/SPEED CURVE

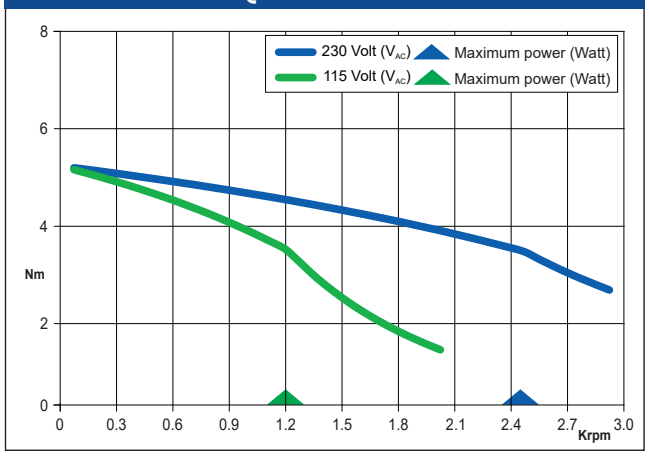

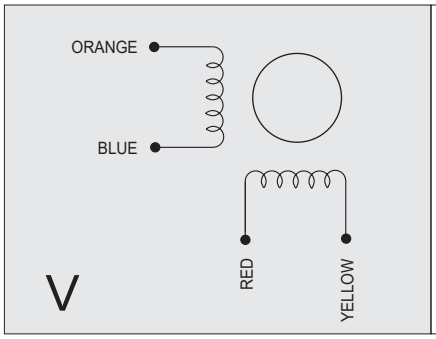

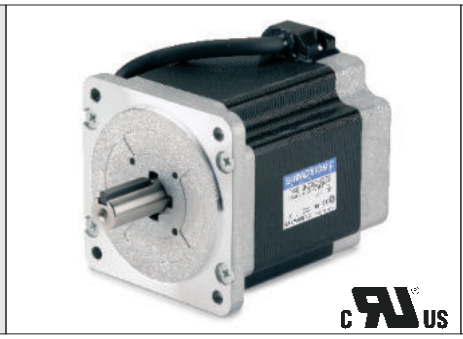

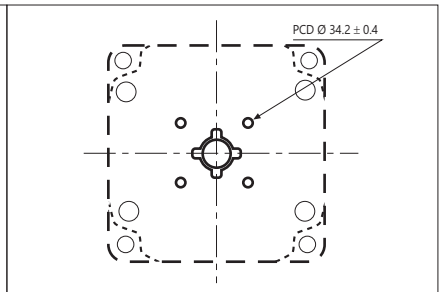

DOUBLE SHAFT MOTORS ONLY.
4 X M4 THREATED HOLES. TAP DEPTH 4.5 mm.

Suggested R.T.A. drive series: 230 Vac X-PLUS

SM 2862-5255

SANYO DENKI
SANMOTION

Dimensions (Unit:mm)

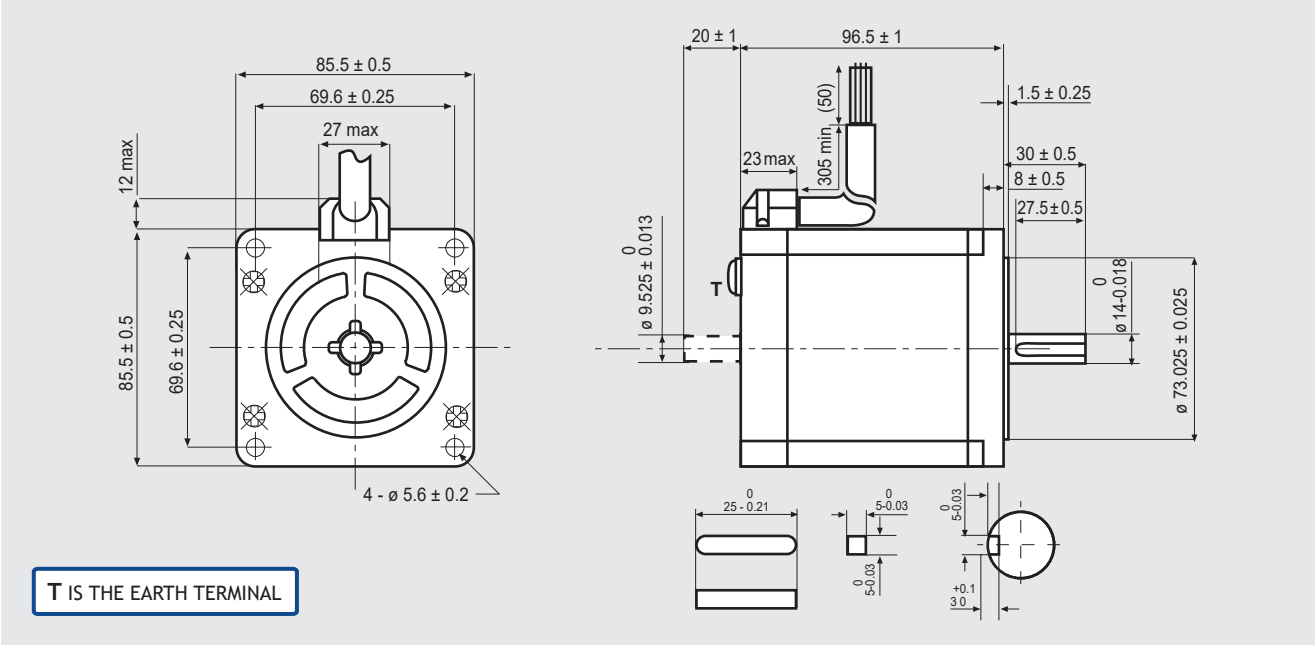

T IS THE EARTH TERMINAL

FEATURES

MODEL		SM 2862-5255 (SM 2862-5225)
BASIC STEP ANGLE		1.8° ± 0.09°
BIPOLAR CURRENT	(Amp)	6.0
RESISTANCE	(Ohm)	0.36
INDUCTANCE	(mH)	2.8
BIPOLAR HOLDING TORQUE	(Ncm)	700
ROTOR INERTIA	(Kgm ^{2} x 10 $^{-7}$)	3000
THEORETICAL ACCELERATION	(rad x sec.$^{-2}$)	23300
BACK E.M.F.	(V/Krpm)	120
MASS	(Kg)	2.9
INTERNATIONAL STANDARDS		UL, CSA
INSULATION VOLTAGE	(V)	250 VAC (350 VDC)
PROTECTION DEGREE		IP43-F
LEADS CODE		V

Codes between brackets refer to double shaft models.

TORQUE/SPEED CURVE

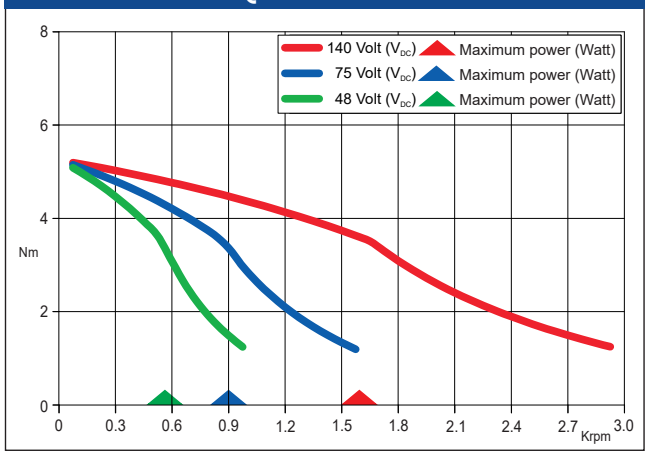

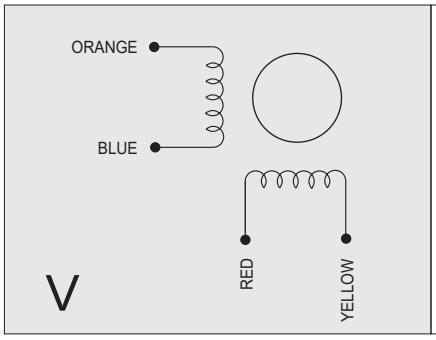

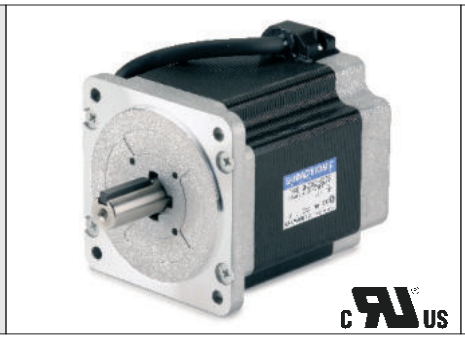

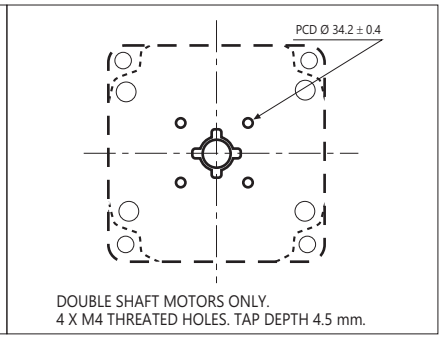

DOUBLE SHAFT MOTORS ONLY.
4 X M4 THREATED HOLES. TAP DEPTH 4.5 mm.

Suggested R.T.A. drive series: NDC, ADW, HGD, PLUS

SM 2863-5155

SANYO DENKI
SANMOTION

Dimensions (Unit:mm)

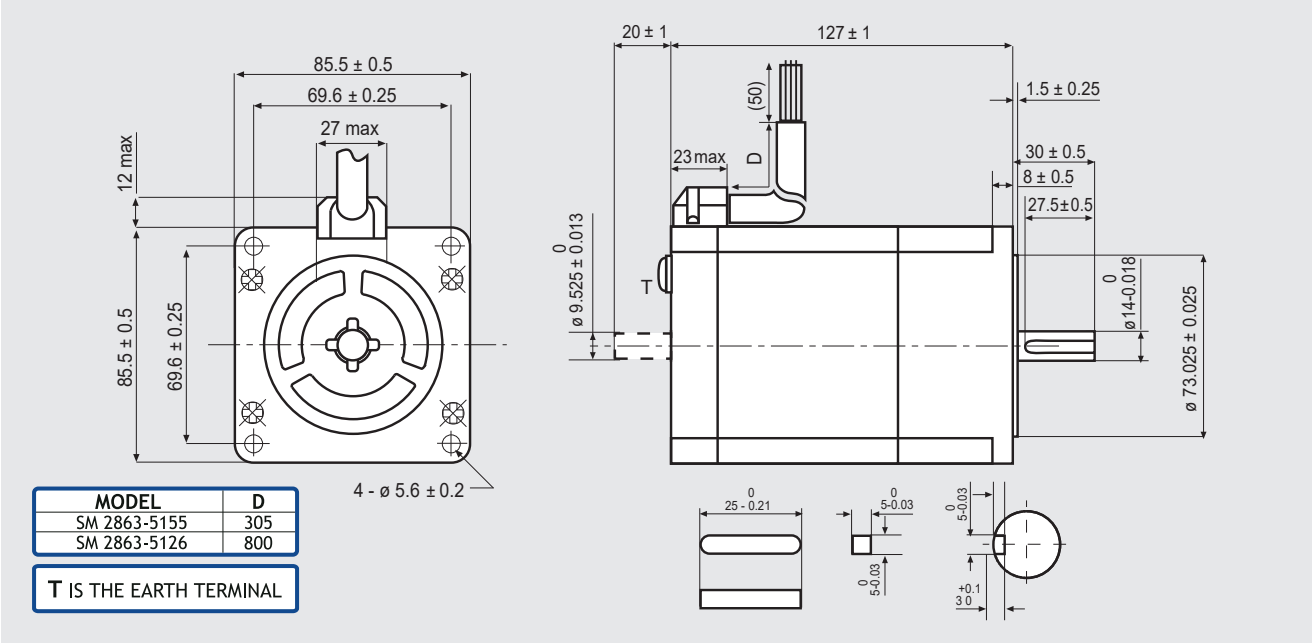

MODEL	D
SM 2863-5155	305
SM 2863-5126	800

T IS THE EARTH TERMINAL

FEATURES

MODEL		SM 2863-5155 (SM 2863-5126)
BASIC STEP ANGLE		1.8° ± 0.09°
BIPOLAR CURRENT	(Amp)	4.0
RESISTANCE	(Ohm)	1.0
INDUCTANCE	(mH)	7.9
BIPOLAR HOLDING TORQUE	(Ncm)	920
ROTOR INERTIA	(Kgm ^{2} x 10 $^{-7}$)	4500
THEORETICAL ACCELERATION	(rad x sec.$^{-2}$)	20500
BACK E.M.F.	(V/Krpm)	241
MASS	(Kg)	4
INTERNATIONAL STANDARDS		UL, CSA
INSULATION VOLTAGE	(V)	250 VAC (350 VDC)
PROTECTION DEGREE		IP43-F
LEADS CODE		V

Codes between brackets refer to double shaft models.

TORQUE/SPEED CURVE

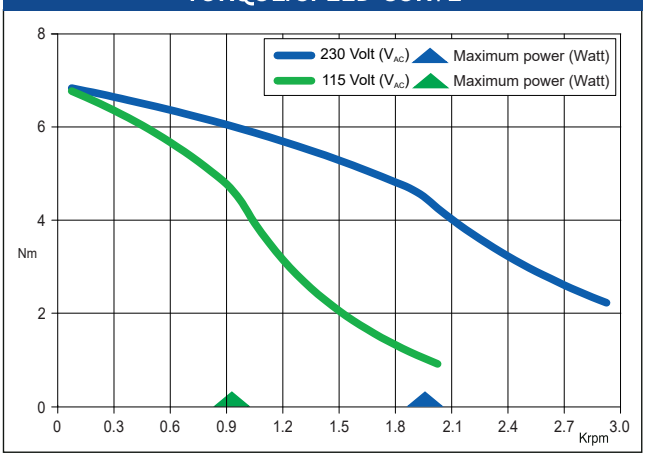

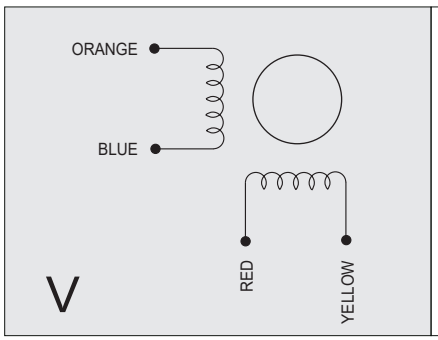

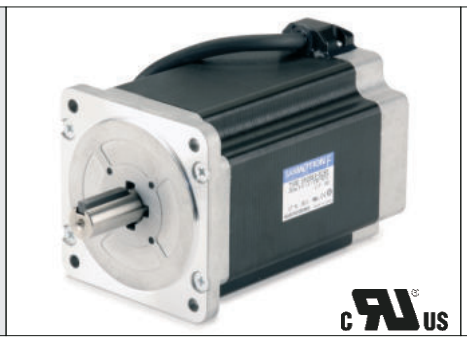

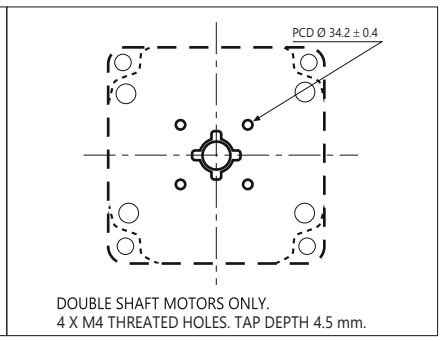

Suggested R.T.A. drive series: 230 Vac X-PLUS

SM 2863-5255

SANYO DENKI
SANMOTION

Dimensions (Unit:mm)

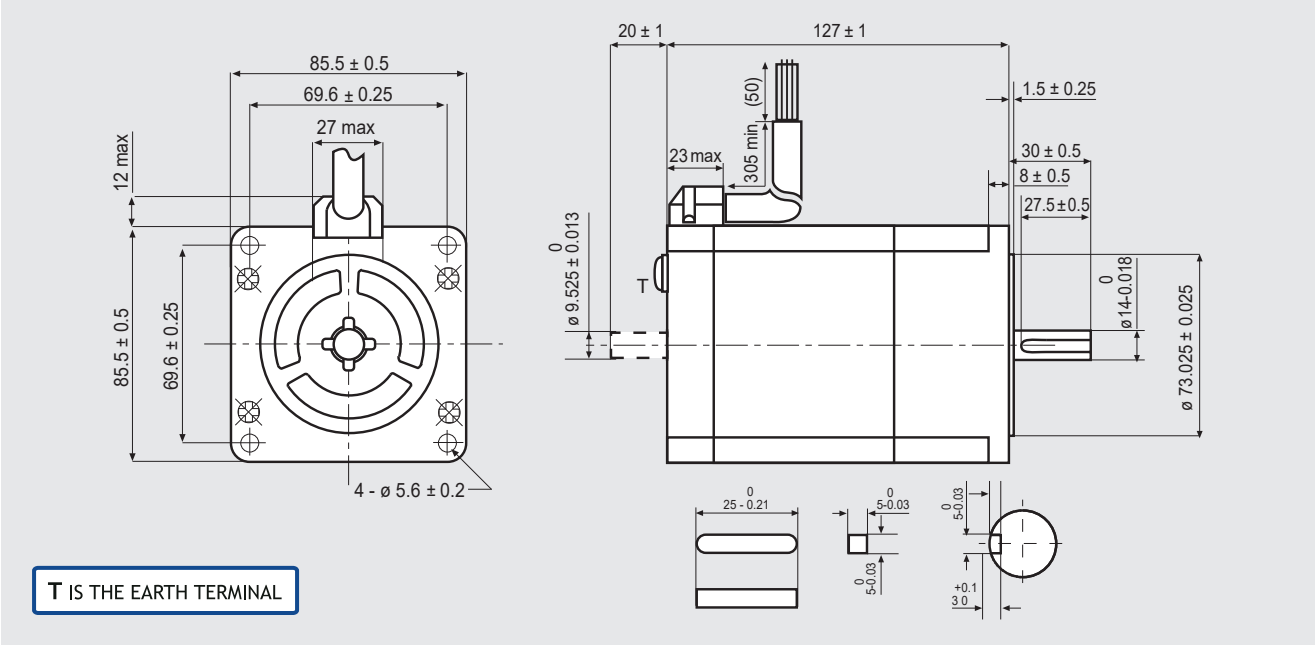

FEATURES

MODEL		SM 2863-5255 (SM 2863-5225)
BASIC STEP ANGLE		1.8° ± 0.09°
BIPOLAR CURRENT	(Amp)	6.0
RESISTANCE	(Ohm)	0.46
INDUCTANCE	(mH)	3.8
BIPOLAR HOLDING TORQUE	(Ncm)	920
ROTOR INERTIA	(Kgm ^{2} x 10 $^{-7}$)	4500
THEORETICAL ACCELERATION	(rad x sec.$^{-2}$)	20500
BACK E.M.F.	(V/Krpm)	161
MASS	(Kg)	4
INTERNATIONAL STANDARDS		UL, CSA
INSULATION VOLTAGE	(V)	250 VAC (350 VDC)
PROTECTION DEGREE		IP43-F
LEADS CODE		V

Codes between brackets refer to double shaft models.

TORQUE/SPEED CURVE

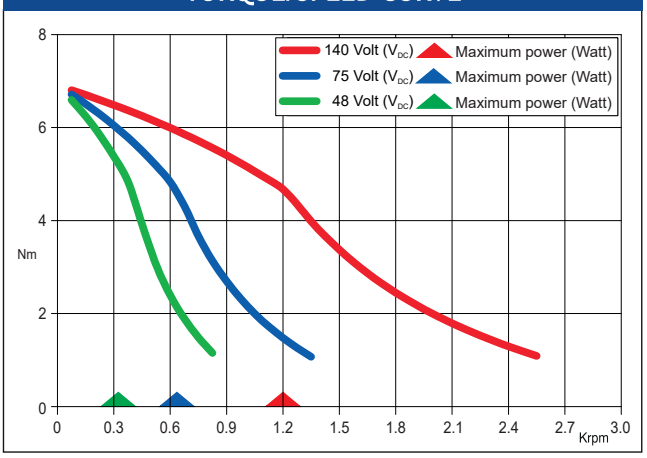

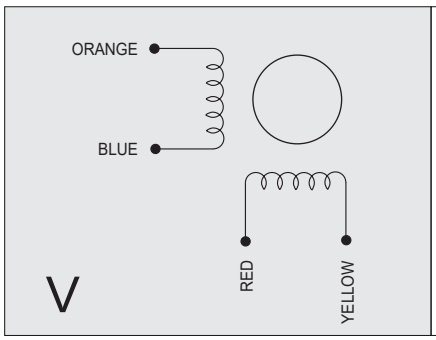

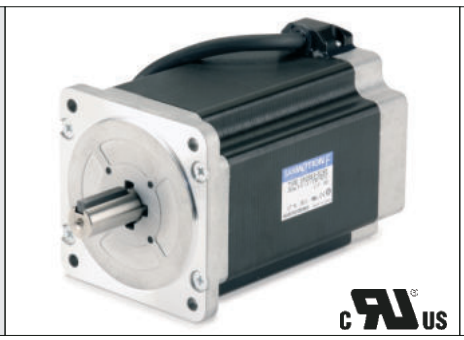

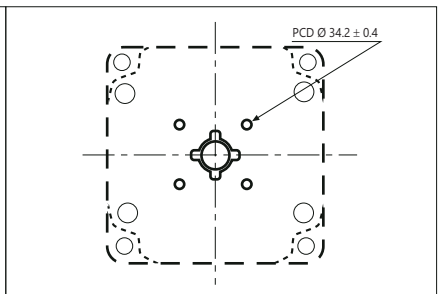

DOUBLE SHAFT MOTORS ONLY.
4 X M4 THREATED HOLES. TAP DEPTH 4.5 mm.

Suggested R.T.A. drive series: NDC, ADW, HGD, PLUS

103-H89222-6341

SANYO DENKI
SANMOTION

Dimensions (Unit:mm)

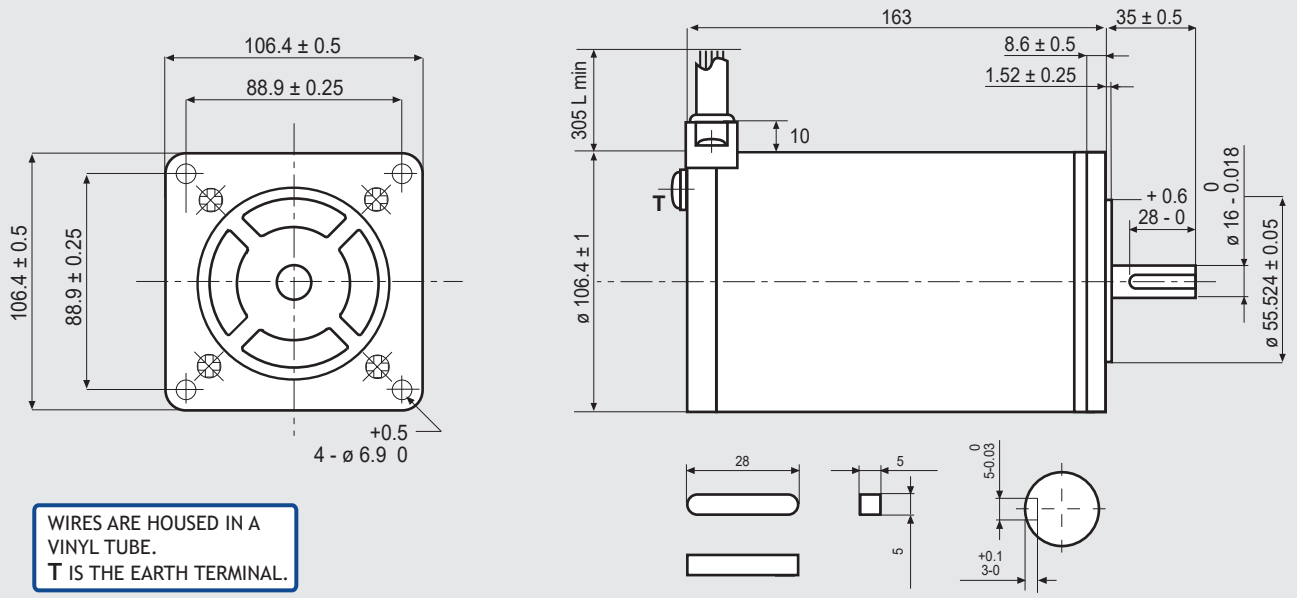

WIRES ARE HOUSED IN A VINYL TUBE.
T IS THE EARTH TERMINAL.

FEATURES

MODEL		103-H89222-6341 (103-H89222-6311)
BASIC STEP ANGLE		1.8° ± 0.09°
BIPOLAR CURRENT	(Amp)	6.0
UNIPOLAR CURRENT	(Amp)	
RESISTANCE	(Ohm)	0.45
INDUCTANCE	(mH)	5.4
BIPOLAR HOLDING TORQUE	(Ncm)	1620
UNIPOLAR HOLDING TORQUE	(Ncm)	
ROTOR INERTIA	(Kgm ^{2} x 10 $^{-7}$)	14650
THEORETICAL ACCELERATION	(rad x sec.$^{-2}$)	11100
BACK E.M.F.	(V/Krpm)	270
MASS	(Kg)	7
PROTECTION DEGREE		IP43
LEADS CODE		V

Codes between brackets refer to double shaft models.

TORQUE/SPEED CURVE

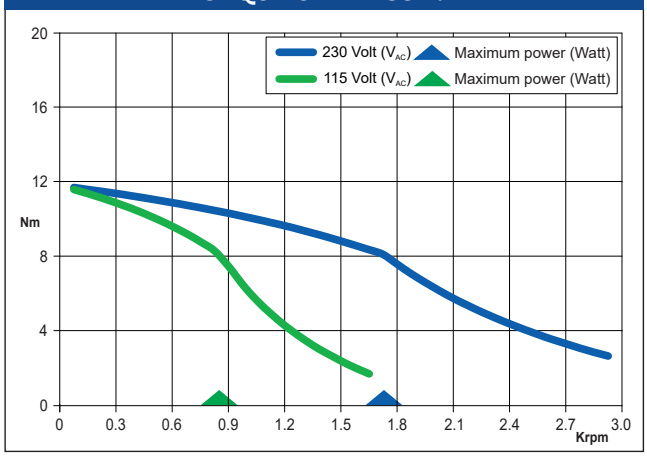

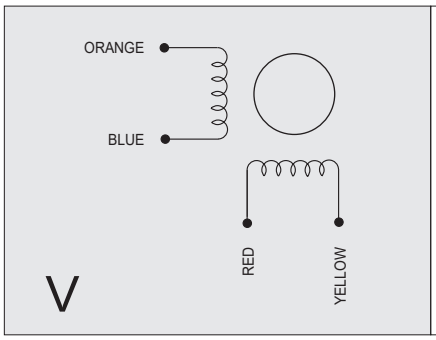

Suggested R.T.A. drive model: X-MIND B6

103-H89222-6541

SANYO DENKI
SANMOTION

Dimensions (Unit:mm)

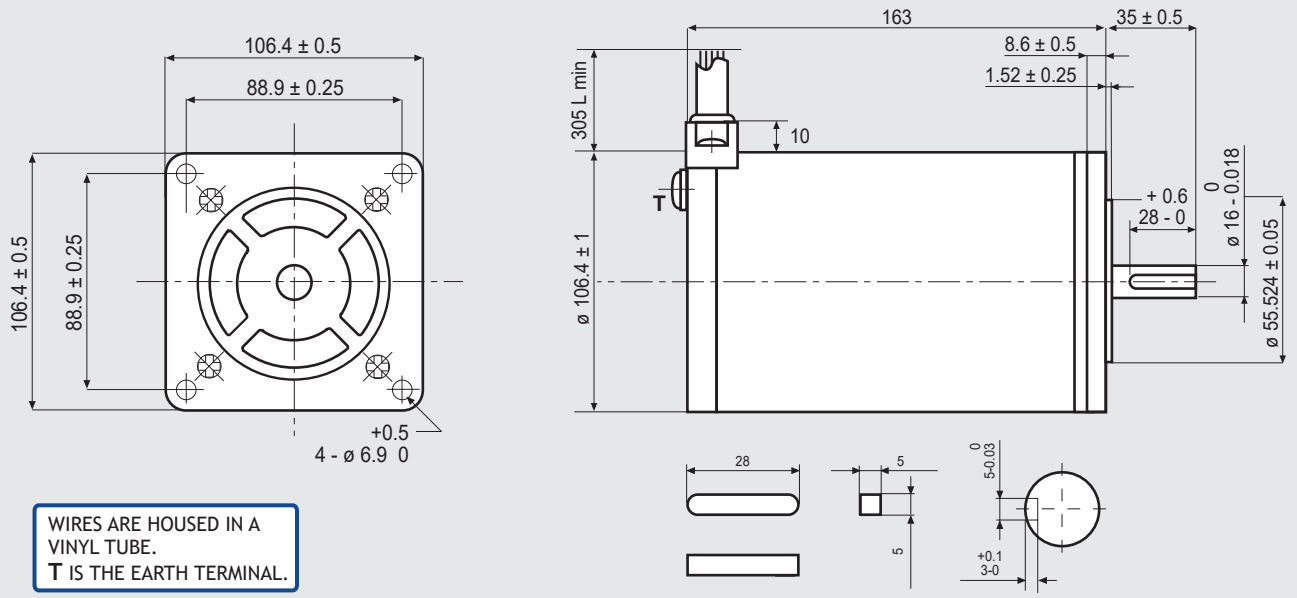

WIRES ARE HOUSED IN A VINYL TUBE.
T IS THE EARTH TERMINAL.

FEATURES

MODEL		103-H89222-6541
BASIC STEP ANGLE		1.8° ± 0.09°
BIPOLAR CURRENT	(Amp)	10
UNIPOLAR CURRENT	(Amp)	
RESISTANCE	(Ohm)	0.16
INDUCTANCE	(mH)	1.9
BIPOLAR HOLDING TORQUE	(Ncm)	1620
UNIPOLAR HOLDING TORQUE	(Ncm)	
ROTOR INERTIA	(Kgm ^{2} x 10 $^{-7}$)	14650
THEORETICAL ACCELERATION	(rad x sec.$^{-2}$)	11100
BACK E.M.F.	(V/Krpm)	162
MASS	(Kg)	7
PROTECTION DEGREE		IP43
LEADS CODE		V

TORQUE/SPEED CURVE

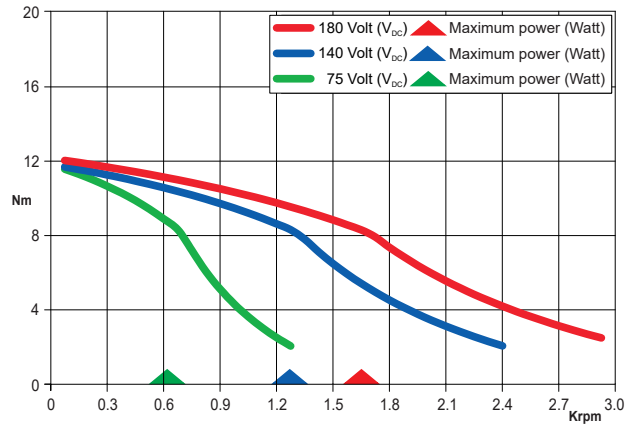

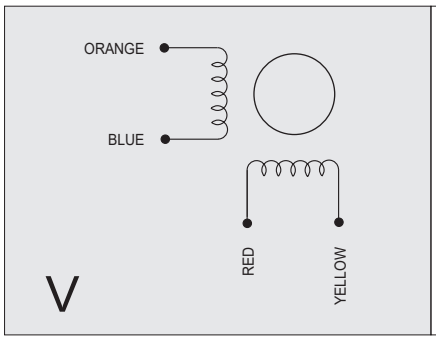

Suggested R.T.A. drive series: PLUS

103-H89223-6341

SANYO DENKI
SANMOTION

Dimensions (Unit:mm)

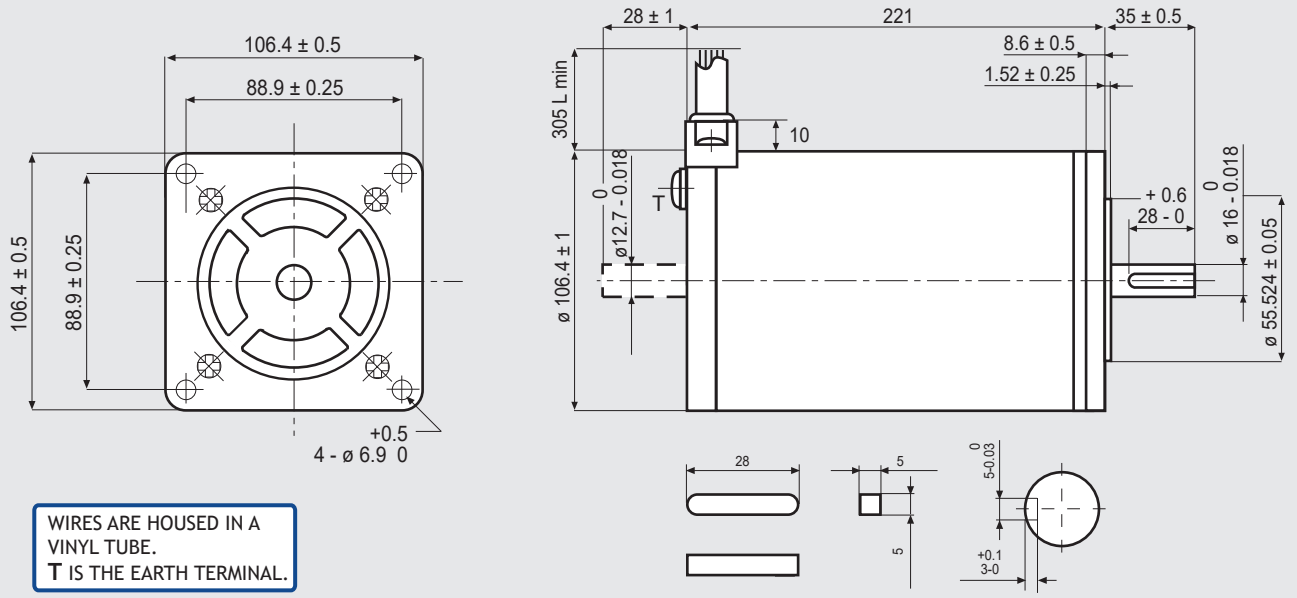

WIRES ARE HOUSED IN A VINYL TUBE.
T IS THE EARTH TERMINAL.

FEATURES

MODEL		103-H89223-6341 (103-H89223-6311)
BASIC STEP ANGLE		1.8° ± 0.09°
BIPOLAR CURRENT	(Amp)	6.0
UNIPOLAR CURRENT	(Amp)	
RESISTANCE	(Ohm)	0.63
INDUCTANCE	(mH)	8.0
BIPOLAR HOLDING TORQUE	(Ncm)	2460
UNIPOLAR HOLDING TORQUE	(Ncm)	
ROTOR INERTIA	(Kgm ^{2} x 10 $^{-7}$)	22000
THEORETICAL ACCELERATION	(rad x sec.$^{-2}$)	11100
BACK E.M.F.	(V/Krpm)	410
MASS	(Kg)	10
PROTECTION DEGREE		IP43
LEADS CODE		V

Codes between brackets refer to double shaft models.

TORQUE/SPEED CURVE

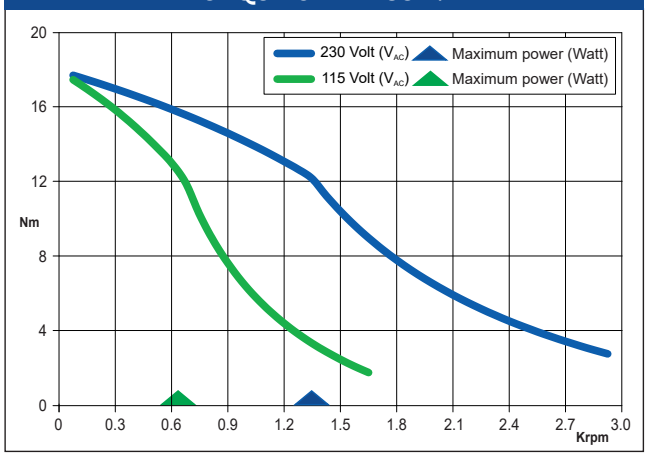

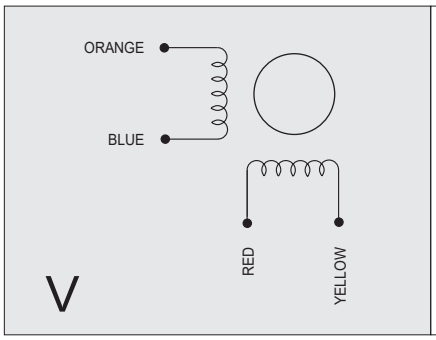

Suggested R.T.A. drive model: X-MIND B6

103-H89223-6641

SANYO DENKI
SANMOTION

Dimensions (Unit:mm)

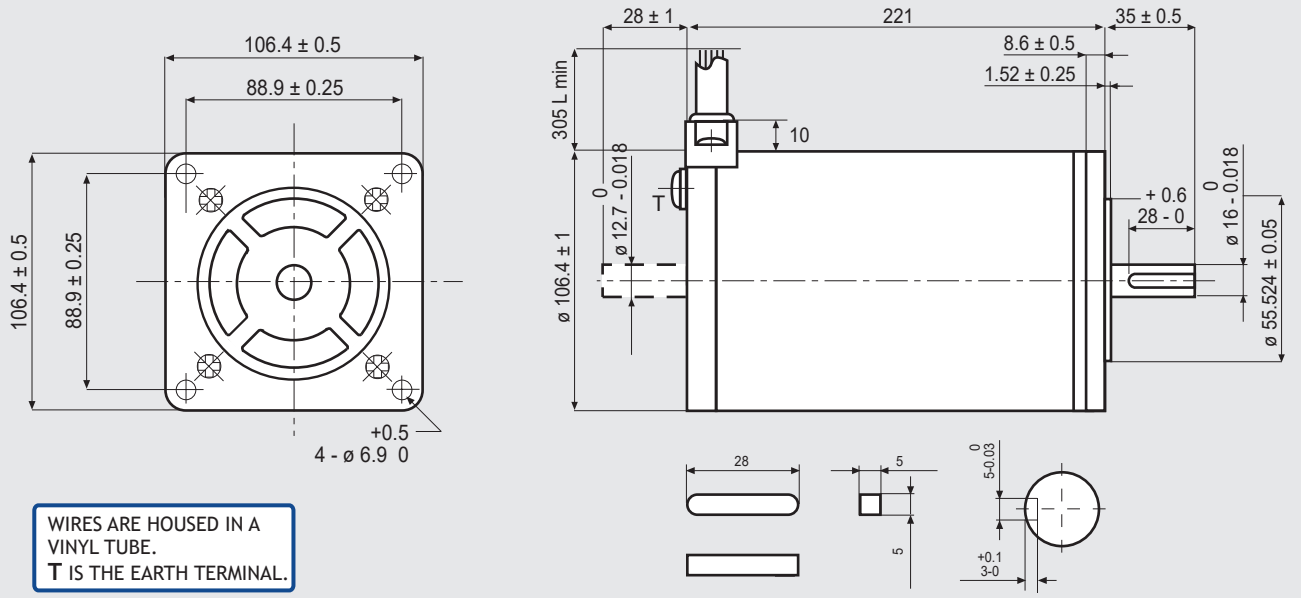

WIRES ARE HOUSED IN A VINYL TUBE.
T IS THE EARTH TERMINAL.

FEATURES

MODEL		103-H89223-6641 (103-H89223-6611)
BASIC STEP ANGLE		1.8° ± 0.09°
BIPOLAR CURRENT	(Amp)	12.0
UNIPOLAR CURRENT	(Amp)	
RESISTANCE	(Ohm)	0.16
INDUCTANCE	(mH)	2.0
BIPOLAR HOLDING TORQUE	(Ncm)	2460
UNIPOLAR HOLDING TORQUE	(Ncm)	
ROTOR INERTIA	(Kgm ^{2} x 10 $^{-7}$)	22000
THEORETICAL ACCELERATION	(rad x sec.$^{-2}$)	11100
BACK E.M.F.	(V/Krpm)	205
MASS	(Kg)	10
PROTECTION DEGREE		IP43
LEADS CODE		V

Codes between brackets refer to double shaft models.

TORQUE/SPEED CURVE

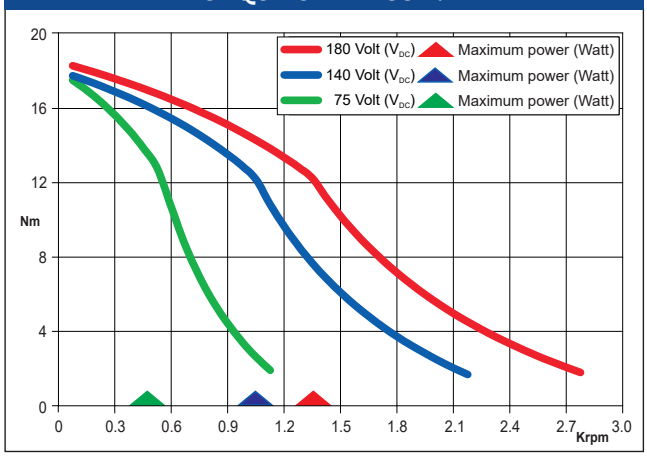

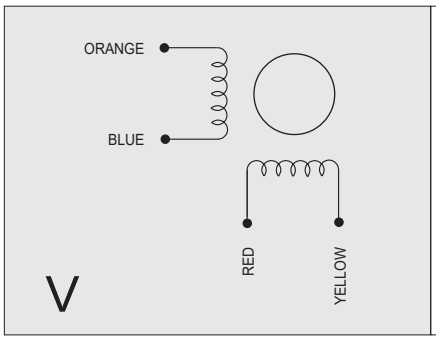

Suggested R.T.A. series: PLUS

NOT PREFERRED MODELS

	HOLDING TORQUE (Ncm)	FLANGE SIZE (mm)	LENGTH (mm)	BIPOLAR CURRENT* (A)
103-H8221-6241	300	85.8	62.0	6.0
103-H8221-6211	300	85.8	62.0	6.0
103-H8222-6340	560	85.8	92.2	6.0
103-H8222-6310	560	85.8	92.2	6.0
103-H8223-6540	790	85.8	125.9	9.0
103-H8223-6510	790	85.8	125.9	9.0

"Not preferred models" are models which have been replaced with the latest versions.
They are still available in R.T.A.'s stock, however they are not recommended for new applications.

STEPPING MOTORS

TRADITIONAL STEPPING MOTORS WITH ENCODER

EM 0HxM-04D0

SANYO DENKI
SANMOTION

Dimensions (Unit:mm)

R.T.A. ENCODER CABLES: CVEPB0D0M4 (40 cm)
CVEPB0D01M (1 mt)

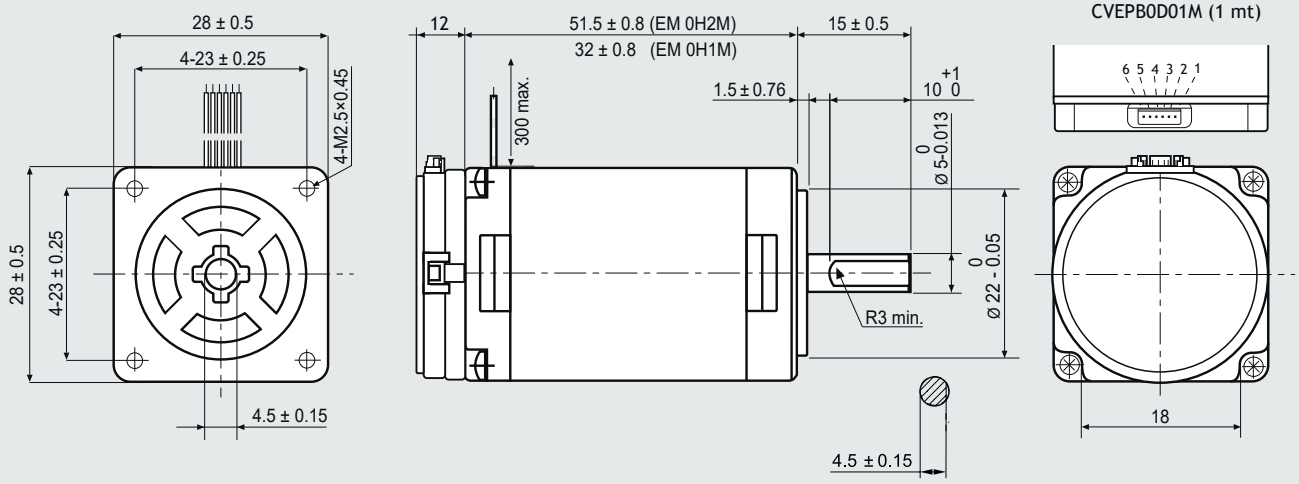

FEATURES

MODEL		EM 0H1M-04D0	EM 0H2M-04D0
SANYO DENK MOTOR CODE		SH 2281-5231	SH 2285-5231
BASIC STEP ANGLE		1.8° ± 0.09°	1.8° ± 0.09°
BIPOLAR CURRENT	(A)	0.7*	0.7*
UNIPOLAR CURRENT	(A)	1.0	1.0
RESISTANCE	(Ohm)	2.85	4.1
INDUCTANCE	(mH)	1.0	1.9
BIPOLAR HOLDING TORQUE	(Ncm)	7	14.5
UNIPOLAR HOLDING TORQUE	(Ncm)	5.5	11.5
ROTOR INERTIA	(Kgm ^{2} x 10^{-7})	10	22
THEORETICAL ACCELERATION	(rad x sec. $^{-2}$)	70000	66000
BACK E.M.F.	(V/Krpm)	15	15
MASS	(Kg)	0.11	0.2

TORQUE/SPEED CURVE

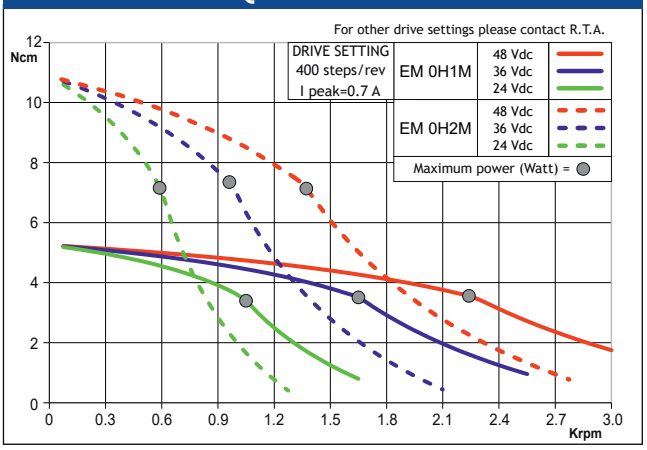

ENCODER FEATURES

POWER SUPPLY VOLTAGE	(V)	5 V_{DC} ± 5%
CURRENT CONSUMPTION	(mA)	40
HIGH LEVEL OUTPUT	(V)	3.4 (TIP) - 2.4 (MIN) (I_{MAX}=20 mA)
LOW LEVEL OUTPUT	(V)	0.2 (TIP) - 0.4 (MAX) (I_{MAX}=20 mA)
OUTPUT SIGNAL		Differential
RESOLUTION		400 cycles per revolution
MAXIMUM FREQUENCY	(KHz)	60
INDEX VERSION		No

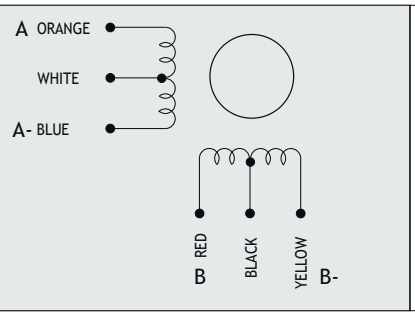

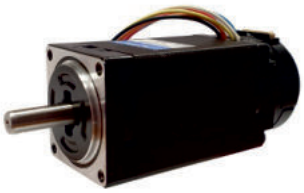

ENCODER PIN-OUT

DESCRIPTION	PINS	R.T.A. CABLE LEADS COLOR
GND	1	BLACK
CHANNEL A+	2	BLUE
CHANNEL A-	3	BROWN
+DC (5 V)	4	RED
CHANNEL B+	5	GREEN
CHANNEL B-	6	PURPLE

R.T.A. ENCODER CABLES:
CVEPB0D0M4 (40 cm) / CVEPB0D01M (1 mt)

Suggested R.T.A. drive series: BSD, CSD, ADW, HGD, FLEX-DRIVE

EM 1H2H-0XX0

Dimensions (Unit:mm)

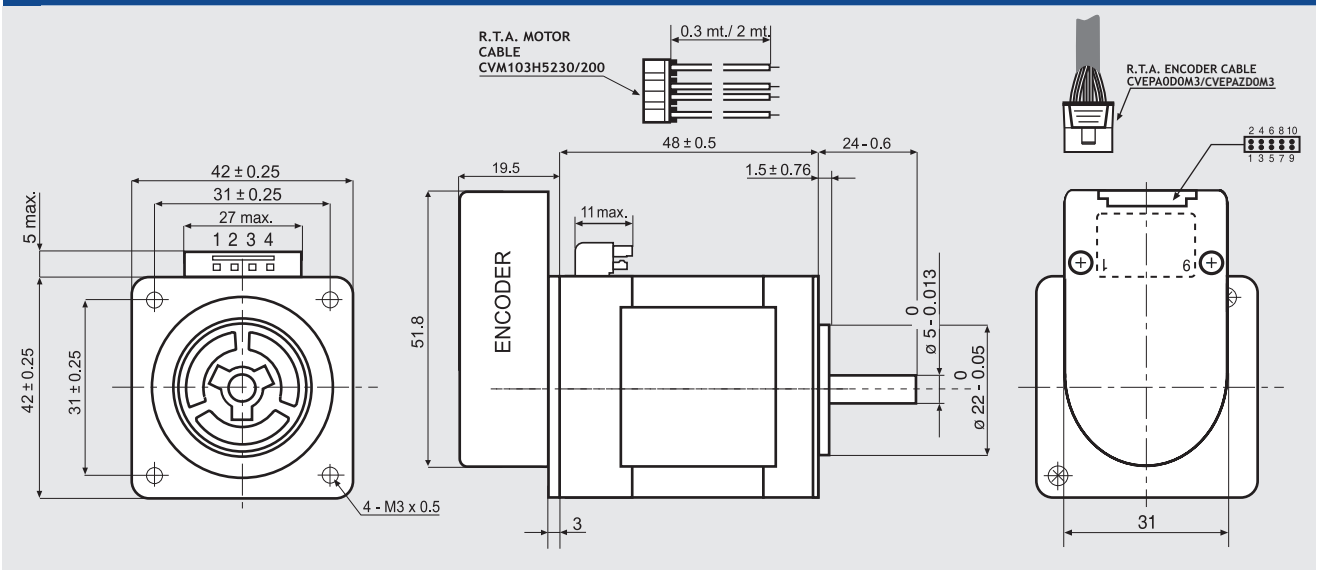

SANYO DENKI MOTOR FEATURES

MODEL		EM 1H2H-0XX0
SANYO DENKI MOTOR CODE		103-H5210-4512
BASIC STEP ANGLE		1.8° ± 0.09°
BIPOLAR PARALLEL CURRENT	(A)	2.0
RESISTANCE	(Ohm)	1.25
INDUCTANCE	(mH)	2.4
BIPOLAR HOLDING TORQUE	(Ncm)	51
ROTOR INERTIA	($Kgm^2 \times 10^{-7}$)	74
THEORETICAL ACCELERATION	(rad × $sec.^{-2}$)	69000
BACK E.M.F.	(V/Krpm)	14
MASS	(Kg)	0.35
LEADS CODE		V

TORQUE/SPEED CURVE

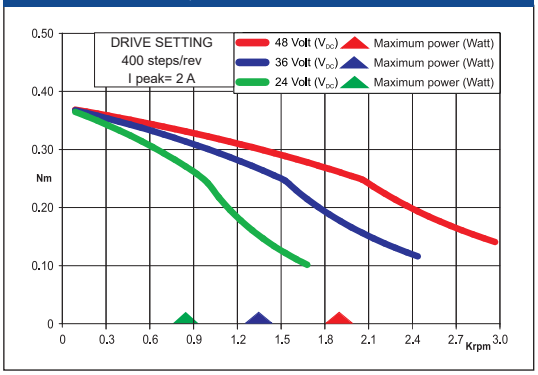

103-H5210-4512 MOTOR NEEDS CVM103H5230 OR CVM103H52200 R.T.A. CABLES. CONTACT R.T.A. FOR FURTHER DETAILS.

ENCODER OPTIONS:		EM 1H2H-04D0	EM 1H2H-04E0	EM 1H2H-0HE0
RESOLUTION		400 cpr	400 cpr	4000 cpr
INDEX		No	Yes	Yes
CURRENT CONSUMPTION	(mA)	50	50	85
HIGH LEVEL OUTPUT	(Volt)	5 (TIP) - 4.75 (MIN) (I_{MAX}=25mA)	3.4 (TIP) - 2.4 (MIN) (I_{MAX}=20mA)	3.4 (TIP) - 2.4 (MIN) (I_{MAX}=20mA)
LOW LEVEL OUTPUT	(Volt)	0.25 (TIP) - 0.6 (MAX) (I_{MAX}=25mA)	0.2 (TIP) - 0.4 (MAX) (I_{MAX}=20mA)	0.2 (TIP) - 0.4 (MAX) (I_{MAX}=20mA)
OUTPUT SIGNAL		Differential	Differential	Differential
MAXIMUM FREQUENCY	(KHz)	100	100	720
POWER SUPPLY VOLTAGE	(Volt)	5 V_{DC} ± 10%	5 V_{DC} ± 10%	5 V_{DC} ± 10%

ENCODER NEEDS CVEPA0D0M3 OR CVEPAZD0M3 R.T.A. CABLE. CONTACT R.T.A. FOR FURTHER DETAILS

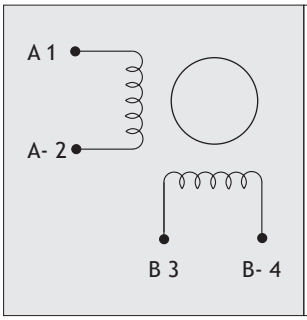

RTA MOTOR CABLE COLORS

DESCRIPTION	CVM103H52200 COLORS	CVM103H5230 COLORS
CHANNEL A	ORANGE	WHITE
CHANNEL A-	BLUE	GREEN
CHANNEL B	YELLOW	YELLOW
CHANNEL B-	RED	BROWN

ENCODER PIN-OUT

DESCRIPTION	04D0 PINS	04E0/0HE0 PINS	R.T.A. CABLE LEADS COLOR
CHANNEL A+	6	6	GREEN
CHANNEL A-	5	5	PURPLE
CHANNEL B+	8	8	BLUE
CHANNEL B-	7	7	BROWN
+ DC (5V)	2	2	RED
GROUND	3	3	BLACK
INDEX+	/	10	ORANGE
INDEX-	/	9	WHITE

Suggested R.T.A. drive series: BSD, CSD, FLEX-DRIVE

EM 1H3H-0XX0

Dimensions (Unit:mm)

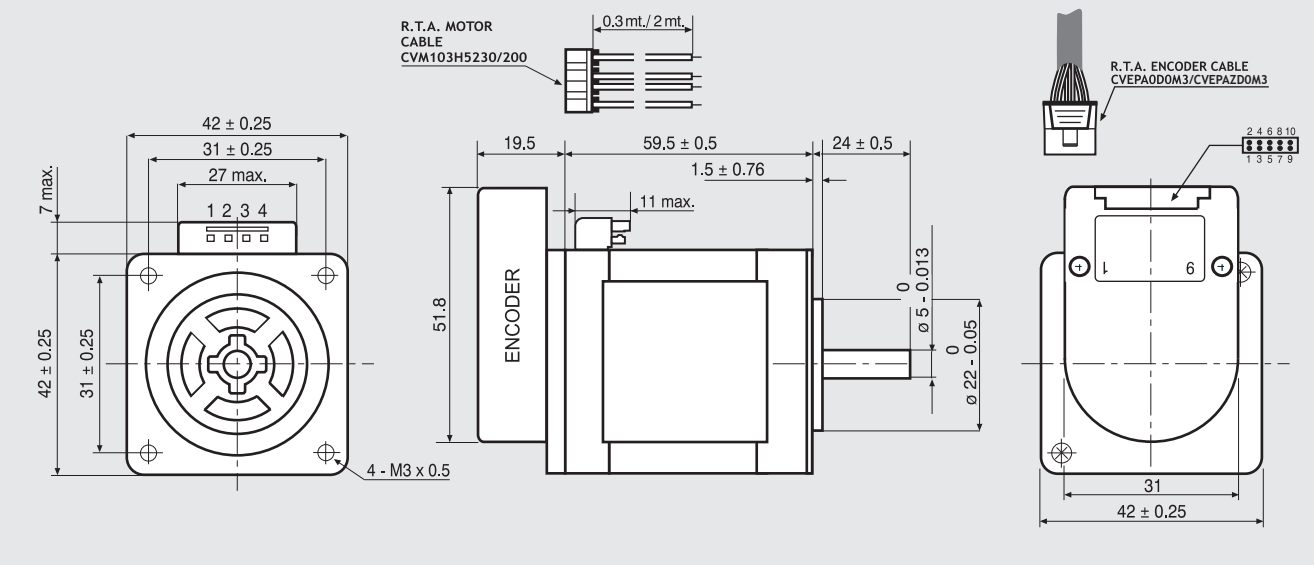

SANYO DENKI MOTOR FEATURES

MODEL		EM 1H3H-0XX0
SANYO DENKI MOTOR CODE		103-H5212-4610
BASIC STEP ANGLE		1.8° ± 0.09°
BIPOLAR PARALLEL CURRENT	(A)	2.0
RESISTANCE	(Ohm)	1.5
INDUCTANCE	(mH)	3.0
BIPOLAR HOLDING TORQUE	(Ncm)	65
ROTOR INERTIA	($Kgm^2 \times 10^{-7}$)	110
THEORETICAL ACCELERATION	($rad \times sec.^{-2}$)	59000
BACK E.M.F.	(V/Krpm)	32
MASS	(Kg)	0.50
LEADS CODE		V

TORQUE/ SPEED CURVE

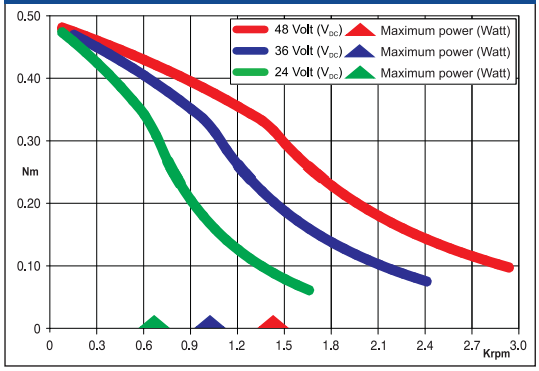

103-H5212-4610 MOTOR NEEDS CVM103H5230 R.T.A. CABLE. CONTACT R.T.A. FOR FURTHER DETAILS.

ENCODER OPTIONS:		EM 1H3H-04D0	EM 1H3H-04E0	EM 1H3H-0HE0
RESOLUTION		400 cpr	400 cpr	4000 cpr
INDEX		No	Yes	Yes
CURRENT CONSUMPTION	(mA)	50	50	85
HIGH LEVEL OUTPUT	(Volt)	5 (TIP) - 4.75 (MIN) (I_{MAX}=25mA)	3.4 (TIP) - 2.4 (MIN) (I_{MAX}=20mA)	3.4 (TIP) - 2.4 (MIN) (I_{MAX}=20mA)
LOW LEVEL OUTPUT	(Volt)	0.25 (TIP) - 0.6 (MAX) (I_{MAX}=25mA)	0.2 (TIP) - 0.4 (MAX) (I_{MAX}=20mA)	0.2 (TIP) - 0.4 (MAX) (I_{MAX}=20mA)
OUTPUT SIGNAL		Differential	Differential	Differential
MAXIMUM FREQUENCY	(KHz)	100	100	720
POWER SUPPLY VOLTAGE	(Volt)	5 V_{DC} ± 10%	5 V_{DC} ± 10%	5 V_{DC} ± 10%

ENCODER NEEDS CVEPA0D0M3 OR CVEPAZD0M3 R.T.A. CABLE. CONTACT R.T.A. FOR FURTHER DETAILS

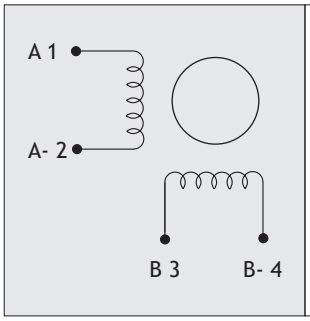

RTA MOTOR CABLE COLORS

DESCRIPTION	CVM103H52200 COLORS	CVM103H5230 COLORS
CHANNEL A	ORANGE	WHITE
CHANNEL A-	BLUE	GREEN
CHANNEL B	YELLOW	YELLOW
CHANNEL B-	RED	BROWN

ENCODER PIN-OUT

DESCRIPTION	04D0 PINS	04E0/0HE0 PINS	R.T.A. CABLE LEADS COLOR
CHANNEL A+	6	6	GREEN
CHANNEL A-	5	5	PURPLE
CHANNEL B+	8	8	BLUE
CHANNEL B-	7	7	BROWN
+ DC (5V)	2	2	RED
GROUND	3	3	BLACK
INDEX+	/	10	ORANGE
INDEX-	/	9	WHITE

Suggested R.T.A. drive series: BSD, CSD, FLEX-DRIVE

EM 2H1M-0XX0

Dimensions (Unit:mm)

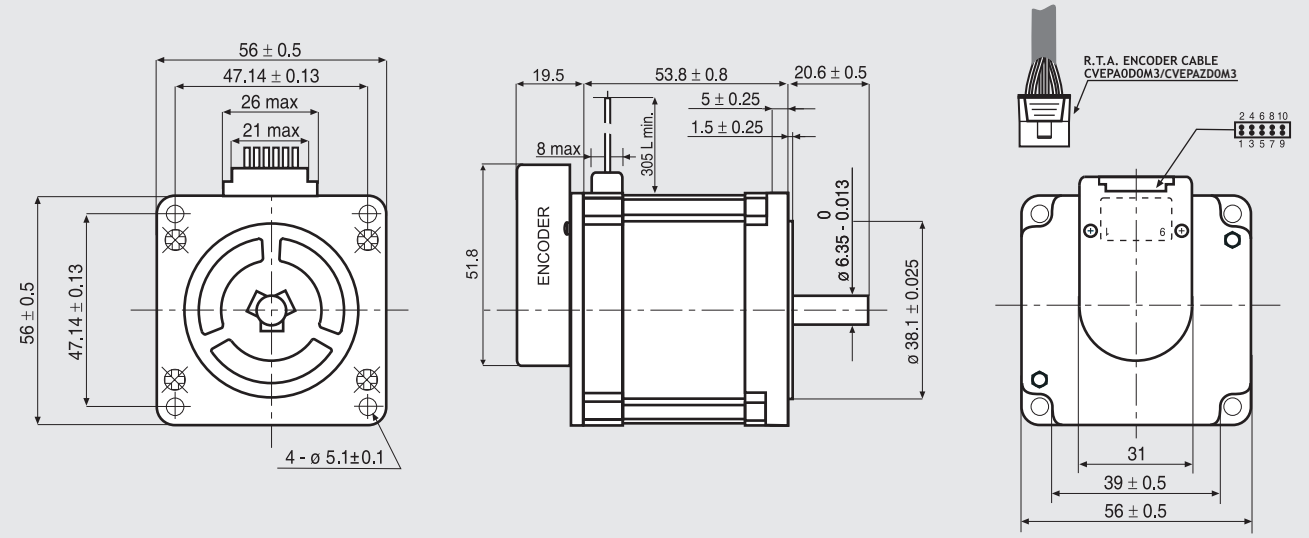

SANYO DENKI MOTOR FEATURES

MODEL		EM 2H1M-0XX0
SANYO DENKI MOTOR CODE		103-H7123-1711
BASIC STEP ANGLE		1.8° ± 0.09°
BIPOLAR PARALLEL CURRENT	(A)	4.0
RESISTANCE	(Ohm)	0.41
INDUCTANCE	(mH)	1.6
BIPOLAR HOLDING TORQUE	(Ncm)	110
ROTOR INERTIA	($Kgm^2 \times 10^{-7}$)	210
THEORETICAL ACCELERATION	($rad \times sec.^{-2}$)	50000
BACK E.M.F.	(V/Krpm)	20
MASS	(Kg)	0.65
LEADS CODE		V

TORQUE/SPEED CURVE

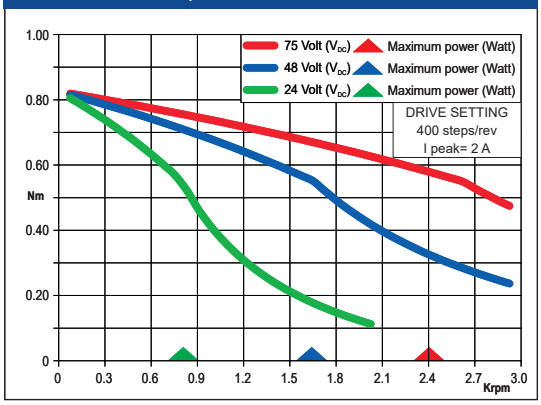

ENCODER OPTIONS:		EM 2H1M-04D0	EM 2H1M-04E0	EM 2H1M-0HE0
RESOLUTION		400 cpr	400 cpr	4000 cpr
INDEX		No	Yes	Yes
CURRENT CONSUMPTION	(mA)	50	50	85
HIGH LEVEL OUTPUT	(Volt)	5 (TIP) - 4.75 (MIN) (I_{MAX}=25mA)	3.4 (TIP) - 2.4 (MIN) (I_{MAX}=20mA)	3.4 (TIP) - 2.4 (MIN) (I_{MAX}=20mA)
LOW LEVEL OUTPUT	(Volt)	0.25 (TIP) - 0.6 (MAX) (I_{MAX}=25mA)	0.2 (TIP) - 0.4 (MAX) (I_{MAX}=20mA)	0.2 (TIP) - 0.4 (MAX) (I_{MAX}=20mA)
OUTPUT SIGNAL		Differential	Differential	Differential
MAXIMUM FREQUENCY	(KHz)	100	100	720
POWER SUPPLY VOLTAGE	(Volt)	5 V_{DC} ± 10%	5 V_{DC} ± 10%	5 V_{DC} ± 10%

ENCODER NEEDS CVEPA0D0M3 OR CVEPAZD0M3 R.T.A. CABLE. CONTACT R.T.A. FOR FURTHER DETAILS

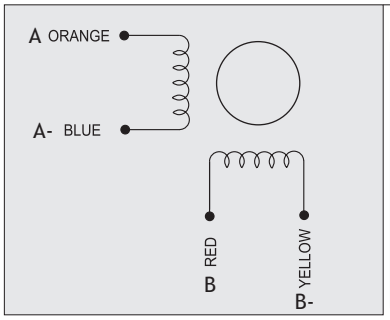

ENCODER PIN-OUT

DESCRIPTION	04D0 PINS	04E0 PINS	0HE0 PINS	R.T.A. CABLE LEADS COLOR
CHANNEL A+	6	6	6	GREEN
CHANNEL A-	5	5	5	PURPLE
CHANNEL B+	8	8	8	BLUE
CHANNEL B-	7	7	7	BROWN
+ DC (5V)	2	2	2	RED
GROUND	3	3	3	BLACK
INDEX+	/	10	10	ORANGE
INDEX-	/	9	9	WHITE

Suggested R.T.A. drive series: BSD, CSD, NDC, ADW, HGD, FLEX-DRIVE

EM 2H2M-0XX0

Dimensions (Unit:mm)

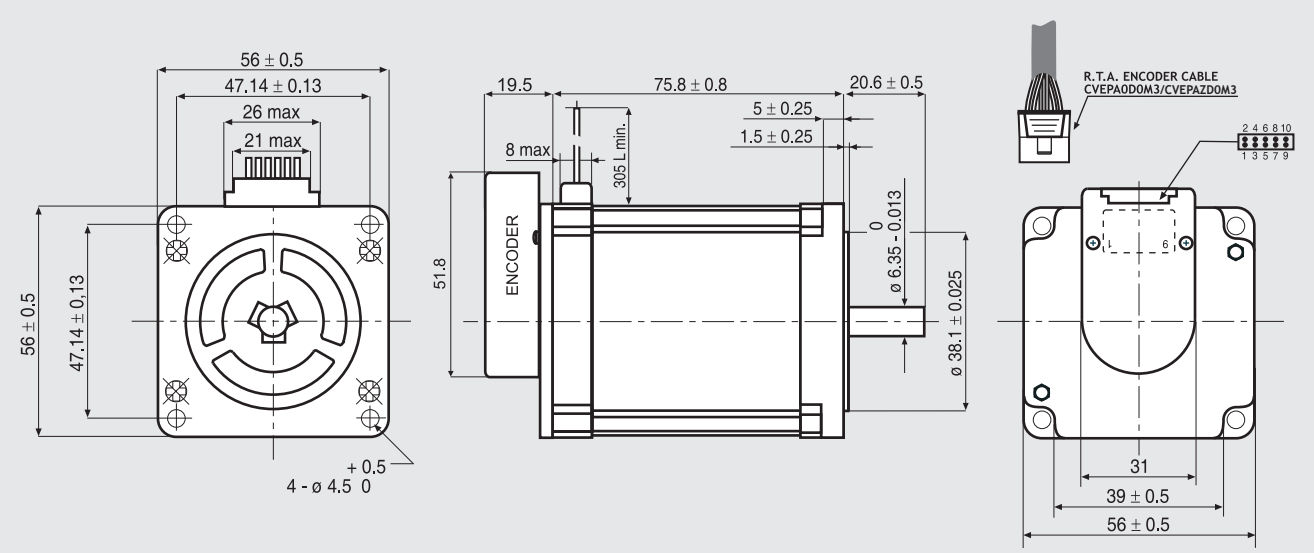

SANYO DENKI MOTOR FEATURES

MODEL		EM 2H2M-OXXO
SANYO DENKI MOTOR CODE		103-H7126-1710
BASIC STEP ANGLE		1.8° ± 0.09°
BIPOLAR PARALLEL CURRENT	(A)	4.0
RESISTANCE	(Ohm)	0.48
INDUCTANCE	(mH)	2.2
BIPOLAR HOLDING TORQUE	(Ncm)	165
ROTOR INERTIA	($Kgm^2 \times 10^{-7}$)	360
THEORETICAL ACCELERATION	($rad \times sec.^{-2}$)	45800
BACK E.M.F.	(V/Krpm)	31
MASS	(Kg)	1.0
LEADS CODE		V

TORQUE/SPEED CURVE

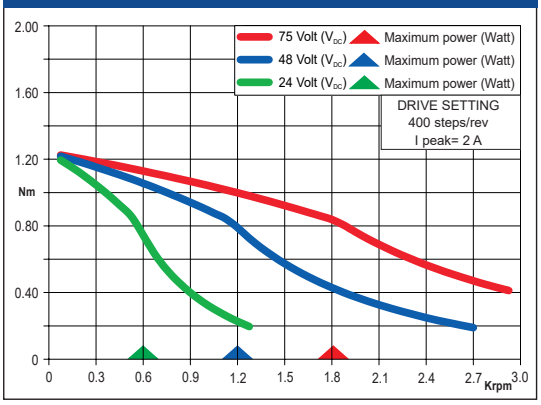

ENCODER OPTIONS:		EM 2H2M-04D0	EM 2H2M-04E0	EM 2H2M-0HE0
RESOLUTION		400 cpr	400 cpr	4000 cpr
INDEX		No	Yes	Yes
CURRENT CONSUMPTION	(mA)	50	50	85
HIGH LEVEL OUTPUT	(Volt)	5 (TIP) - 4.75 (MIN) (I_{MAX}=25mA)	3.4 (TIP) - 2.4 (MIN) (I_{MAX}=20mA)	3.4 (TIP) - 2.4 (MIN) (I_{MAX}=20mA)
LOW LEVEL OUTPUT	(Volt)	0.25 (TIP) - 0.6 (MAX) (I_{MAX}=25mA)	0.2 (TIP) - 0.4 (MAX) (I_{MAX}=20mA)	0.2 (TIP) - 0.4 (MAX) (I_{MAX}=20mA)
OUTPUT SIGNAL		Differential	Differential	Differential
MAXIMUM FREQUENCY	(KHz)	100	100	720
POWER SUPPLY VOLTAGE	(Volt)	5 V_{DC} ± 10%	5 V_{DC} ± 10%	5 V_{DC} ± 10%

ENCODER NEEDS CVEPA0D0M3 OR CVEPAZD0M3 R.T.A. CABLE. CONTACT R.T.A. FOR FURTHER DETAILS

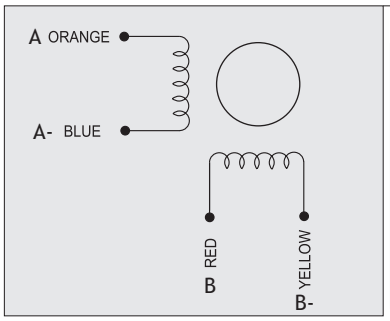

ENCODER PIN-OUT

DESCRIPTION	04D0 PINS	04E0 PINS	0HE0 PINS	R.T.A. CABLE LEADS COLOR
CHANNEL A+	6	6	6	GREEN
CHANNEL A-	5	5	5	PURPLE
CHANNEL B+	8	8	8	BLUE
CHANNEL B-	7	7	7	BROWN
+ DC (5V)	2	2	2	RED
GROUND	3	3	3	BLACK
INDEX+	/	10	10	ORANGE
INDEX-	/	9	9	WHITE

Suggested R.T.A. drive series: BSD, CSD, NDC, ADW, HGD, FLEX-DRIVE

EM 6H1M-0XX0

Dimensions (Unit:mm)

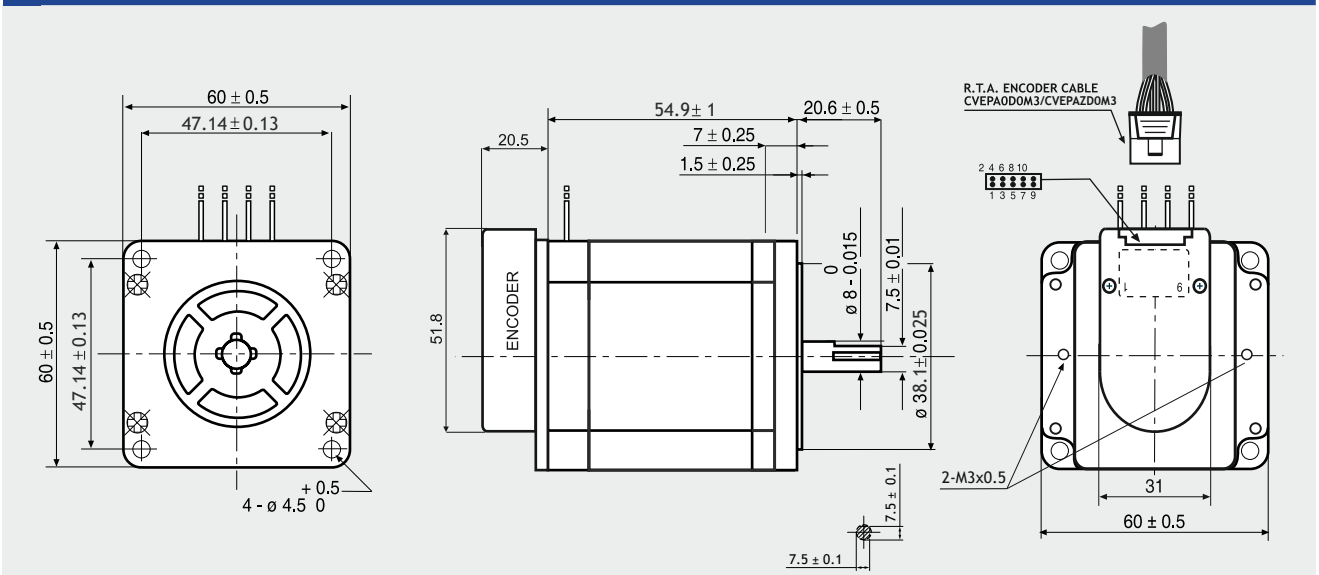

SANYO DENKI MOTOR FEATURES

MODEL		EM 6H1M-0XX0
SANYO DENKI MOTOR CODE		103-H7822-1731
BASIC STEP ANGLE		1.8° ± 0.09°
BIPOLAR PARALLEL CURRENT	(A)	4.0
RESISTANCE	(Ohm)	0.43
INDUCTANCE	(mH)	1.38
BIPOLAR HOLDING TORQUE	(Ncm)	137
ROTOR INERTIA	($Kgm^2 \times 10^{-7}$)	400
THEORETICAL ACCELERATION	($rad \times sec.^{-2}$)	34200
BACK E.M.F.	(V/Krpm)	43
MASS	(Kg)	1.3
LEADS CODE		V

TORQUE/SPEED CURVE

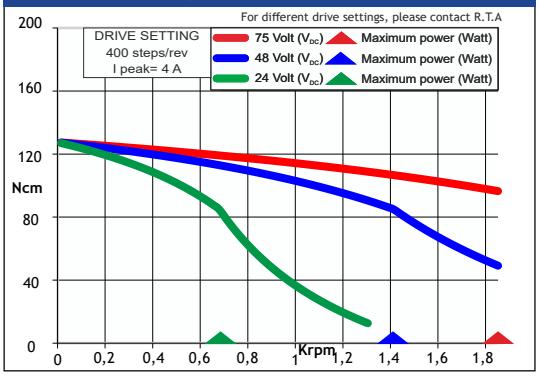

ENCODER OPTIONS:		EM 6H1M-04D0	EM 6H1M-04E0	EM 6H1M-0HE0
RESOLUTION		400 cpr	400 cpr	4000 cpr
INDEX		No	Yes	Yes
CURRENT CONSUMPTION	(mA)	50	50	85
HIGH LEVEL OUTPUT	(Volt)	5 (TIP) - 4.75 (MIN) (I_{MAX}=25mA)	3.4 (TIP) - 2.4 (MIN) (I_{MAX}=20mA)	3.4 (TIP) - 2.4 (MIN) (I_{MAX}=20mA)
LOW LEVEL OUTPUT	(Volt)	0.25 (TIP) - 0.6 (MAX) (I_{MAX}=25mA)	0.2 (TIP) - 0.4 (MAX) (I_{MAX}=20mA)	0.2 (TIP) - 0.4 (MAX) (I_{MAX}=20mA)
OUTPUT SIGNAL		Differential	Differential	Differential
MAXIMUM FREQUENCY	(KHz)	100	100	720
POWER SUPPLY VOLTAGE	(Volt)	5 V_{DC} ± 10%	5 V_{DC} ± 10%	5 V_{DC} ± 10%

ENCODER NEEDS CVEPA0D0M3 OR CVEPAZD0M3 R.T.A. CABLE. CONTACT R.T.A. FOR FURTHER DETAILS

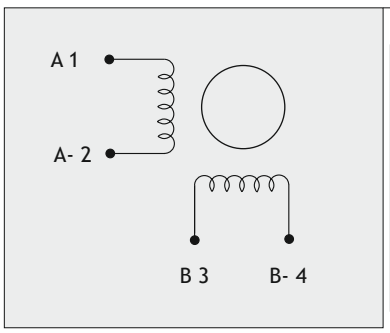

ENCODER PIN-OUT

DESCRIPTION	04D0 PINS	04E0 PINS	0HE0 PINS	R.T.A. CABLE LEADS COLOR
CHANNEL A+	6	6	6	GREEN
CHANNEL A-	5	5	5	PURPLE
CHANNEL B+	8	8	8	BLUE
CHANNEL B-	7	7	7	BROWN
+ DC (5V)	2	2	2	RED
GROUND	3	3	3	BLACK
INDEX+	/	10	10	ORANGE
INDEX-	/	9	9	WHITE
R.T.A. CABLE	CVEPA0D0M3	CVEPAZD03M	CVEPAZD03M	

Suggested R.T.A. drive series: BSD, CSD, NDC, ADW, FLEX-DRIVE

EM 6H2M-0XX0

Dimensions (Unit:mm)

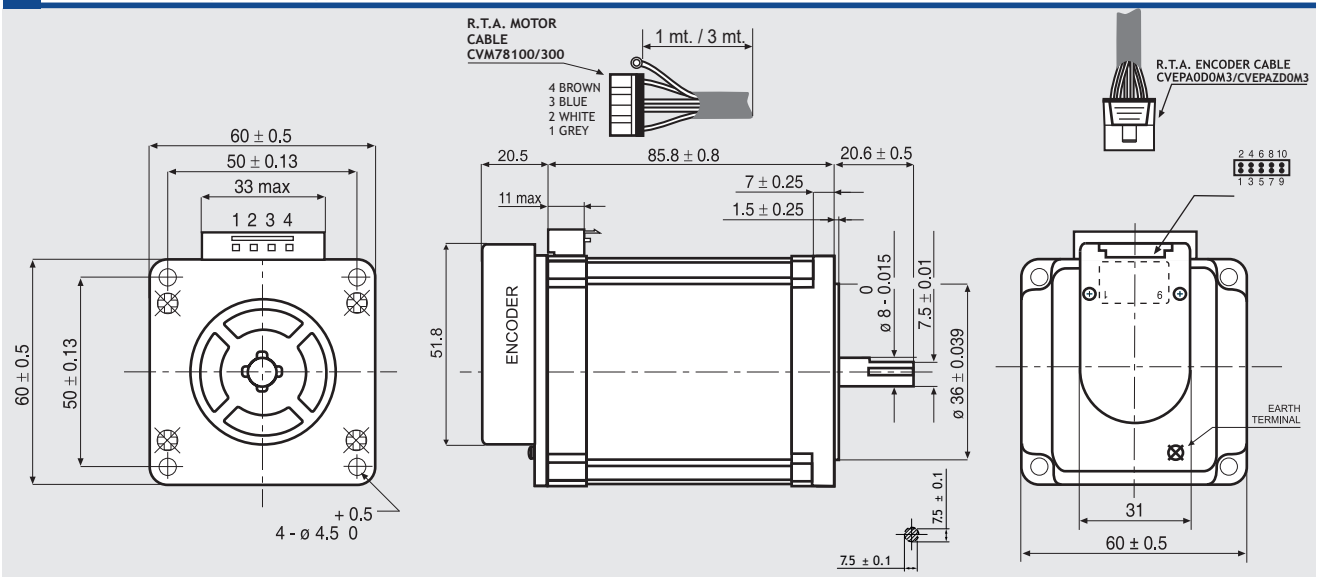

SANYO DENKI MOTOR FEATURES

MODEL		EM 6H2M-0XX0
SANYO DENKI MOTOR CODE		103-H7823-1714
BASIC STEP ANGLE		1.8° ± 0.09°
BIPOLAR PARALLEL CURRENT	(A)	4.0
RESISTANCE	(Ohm)	0.65
INDUCTANCE	(mH)	2.4
BIPOLAR HOLDING TORQUE	(Ncm)	300
ROTOR INERTIA	($Kgm^2 \times 10^{-7}$)	840
THEORETICAL ACCELERATION	($rad \times sec.^{-2}$)	35700
BACK E.M.F.	(V/Krpm)	75
MASS	(Kg)	1.4
LEADS CODE		V

TORQUE/SPEED CURVE

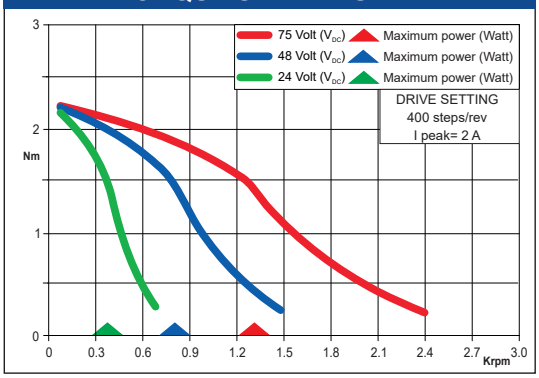

103-H7823-1714 MOTOR NEEDS CVM78/100 OR CVM78/300 R.T.A. CABLES. CONTACT R.T.A. FOR FURTHER DETAILS.

ENCODER OPTIONS:		EM 6H2M-04D0	EM 6H2M-04E0	EM 6H2M-0HE0
RESOLUTION		400 cpr	400 cpr	4000 cpr
INDEX		No	Yes	Yes
CURRENT CONSUMPTION	(mA)	50	50	85
HIGH LEVEL OUTPUT	(Volt)	5 (TIP) - 4.75 (MIN) (I_{MAX}=25mA)	3.4 (TIP) - 2.4 (MIN) (I_{MAX}=20mA)	3.4 (TIP) - 2.4 (MIN) (I_{MAX}=20mA)
LOW LEVEL OUTPUT	(Volt)	0.25 (TIP) - 0.6 (MAX) (I_{MAX}=25mA)	0.2 (TIP) - 0.4 (MAX) (I_{MAX}=20mA)	0.2 (TIP) - 0.4 (MAX) (I_{MAX}=20mA)
OUTPUT SIGNAL		Differential	Differential	Differential
MAXIMUM FREQUENCY	(KHz)	100	100	720
POWER SUPPLY VOLTAGE	(Volt)	5 V_{DC} ± 10%	5 V_{DC} ± 10%	5 V_{DC} ± 10%

ENCODER NEEDS CVEPA0D0M3 OR CVEPAZD0M3 R.T.A. CABLE. CONTACT R.T.A. FOR FURTHER DETAILS

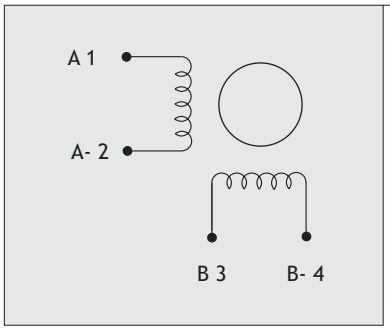

ENCODER PIN-OUT

DESCRIPTION	04D0 PINS	04E0 PINS	0HE0 PINS	R.T.A. CABLE LEADS COLOR
CHANNEL A+	6	6	6	GREEN
CHANNEL A-	5	5	5	PURPLE
CHANNEL B+	8	8	8	BLUE
CHANNEL B-	7	7	7	BROWN
+ DC (5V)	2	2	2	RED
GROUND	3	3	3	BLACK
INDEX+	/	10	10	ORANGE
INDEX-	/	9	9	WHITE
R.T.A. CABLE	CVEPA0D0M3	CVEPAZD03M	CVEPAZD03M	

Suggested R.T.A. drive series: BSD, CSD, NDC, ADW, HGD, PLUS, FLEX-DRIVE

EM 6H3H-0XX0

Dimensions (Unit:mm)

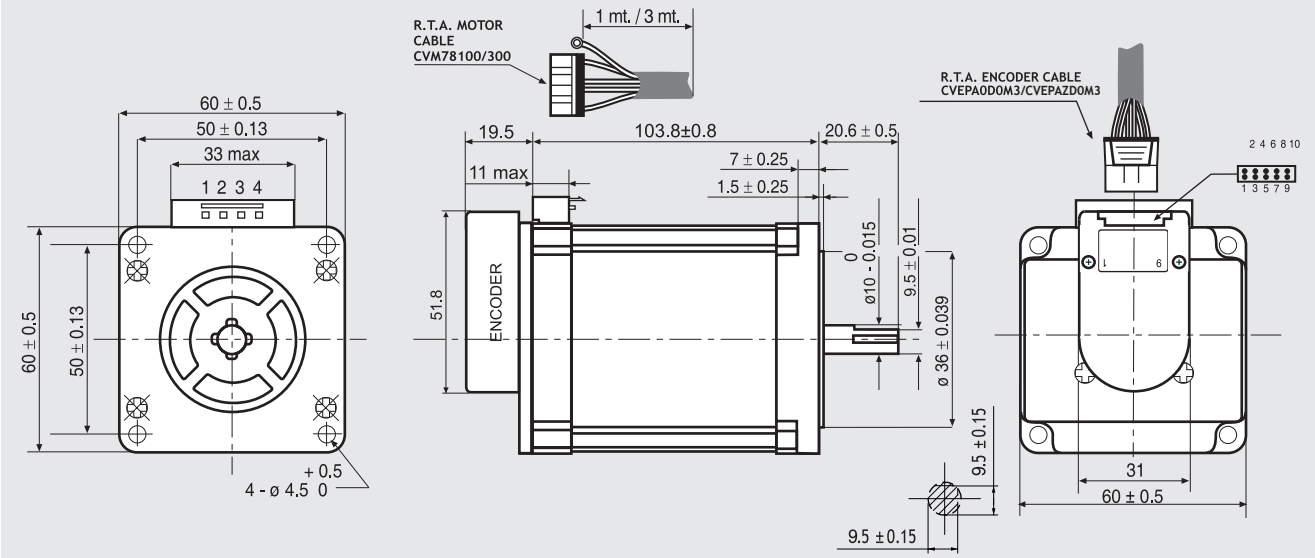

SANYO DENKI MOTOR FEATURES

MODEL		EM 6H3H-0XX0
SANYO DENKI MOTOR CODE		103-H7826-1612
BASIC STEP ANGLE		1.8°± 0.09°
BIPOLAR PARALLEL CURRENT	(A)	6.0
RESISTANCE	(Ohm)	0.43
INDUCTANCE	(mH)	1.45
BIPOLAR HOLDING TORQUE	(Ncm)	380
ROTOR INERTIA	($Kgm^2 \times 10^{-7}$)	1080
THEORETICAL ACCELERATION	(rad × sec.$^{-2}$)	35200
BACK E.M.F.	(V/Krpm)	70
MASS	(Kg)	1.70
LEADS CODE		V

TORQUE/SPEED CURVE

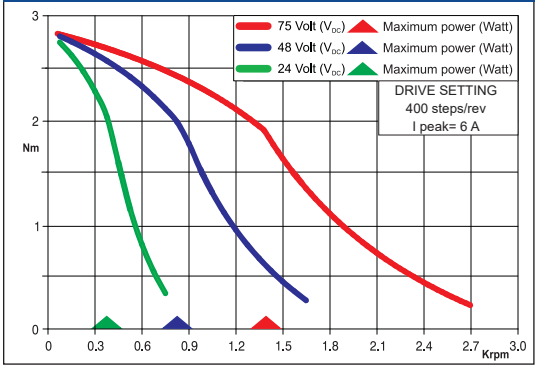

103-H7826-1612 MOTOR NEEDS CVM78/100 OR CVM78/300 R.T.A. CABLES. CONTACT R.T.A. FOR FURTHER DETAILS.

ENCODER OPTIONS:		EM 6H3H-04D0	EM 6H3H-04E0	EM 6H3H-0HE0
RESOLUTION		400 cpr	400 cpr	4000 cpr
INDEX		No	Yes	Yes
CURRENT CONSUMPTION	(mA)	50	50	85
HIGH LEVEL OUTPUT	(Volt)	5 (TIP) - 4.75 (MIN) (I_{MAX}=25mA)	3.4 (TIP) - 2.4 (MIN) (I_{MAX}=20mA)	3.4 (TIP) - 2.4 (MIN) (I_{MAX}=20mA)
LOW LEVEL OUTPUT	(Volt)	0.25 (TIP) - 0.6 (MAX) (I_{MAX}=25mA)	0.2 (TIP) - 0.4 (MAX) (I_{MAX}=20mA)	0.2 (TIP) - 0.4 (MAX) (I_{MAX}=20mA)
OUTPUT SIGNAL		Differential	Differential	Differential
MAXIMUM FREQUENCY	(KHz)	100	100	720
POWER SUPPLY VOLTAGE	(Volt)	5 V_{DC} ± 10%	5 V_{DC} ± 10%	5 V_{DC} ± 10%

ENCODER NEEDS CVEPA0D0M3 OR CVEPAZD0M3 R.T.A. CABLE. CONTACT R.T.A. FOR FURTHER DETAILS

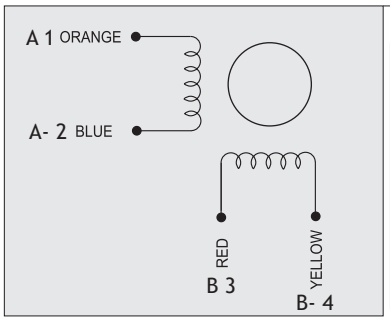

ENCODER PIN-OUT

DESCRIPTION	04D0 PINS	04E0 PINS	0HE0 PINS	R.T.A. CABLE LEADS COLOR
CHANNEL A+	6	6	6	GREEN
CHANNEL A-	5	5	5	PURPLE
CHANNEL B+	8	8	8	BLUE
CHANNEL B-	7	7	7	BROWN
+ DC (5V)	2	2	2	RED
GROUND	3	3	3	BLACK
INDEX+	/	10	10	ORANGE
INDEX-	/	9	9	WHITE
R.T.A. CABLE	CVEPA0D0M3	CVEPAZD03M	CVEPAZD03M	

Suggested R.T.A. drive series: NDC, ADW, HGD, PLUS

EM 3F1L-04D0

Dimensions (Unit:mm)

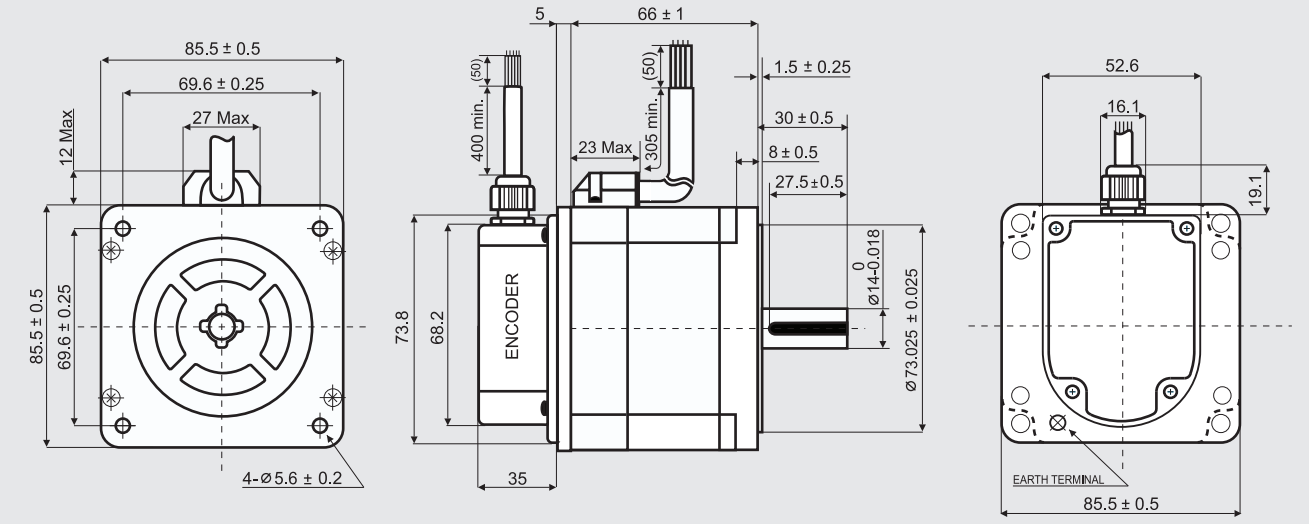

SANYO DENKI MOTOR FEATURES

MODEL		EM 3F1L-04D0
SANYO DENKI MOTOR CODE		SM 2861-5025
BASIC STEP ANGLE		1.8° ± 0.09°
BIPOLAR PARALLEL CURRENT	(Amp)	2.0
RESISTANCE	(Ohm)	2.2
INDUCTANCE	(mH)	15
BIPOLAR HOLDING TORQUE	(Ncm)	360
ROTOR INERTIA	($Kgm^2 \times 10^{-7}$)	1480
THEORETICAL ACCELERATION	($rad \times sec.^{-2}$)	24300
BACK E.M.F.	(V/Krpm)	180
MASS	(Kg)	1.7
INTERNATIONAL STANDARDS		UL, CSA
INSULATION VOLTAGE	(V)	250 VAC (350 VDC)
PROTECTION DEGREE - INSULATION CLASS		IP43 - F
LEADS CODE		V

TORQUE/SPEED CURVE

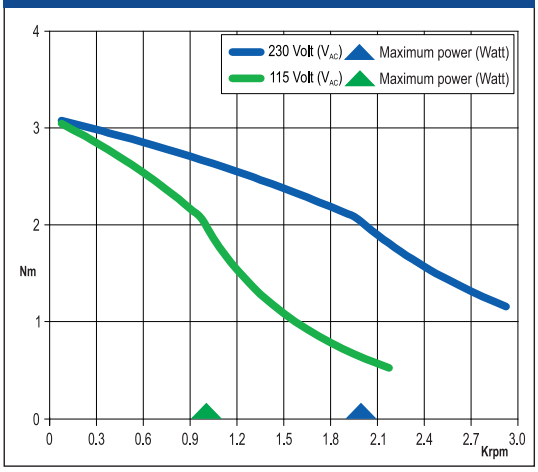

ENCODER FEATURES

POWER SUPPLY VOLTAGE	(Volt)	5 V_{DC} ± 5%
CURRENT CONSUMPTION	(mAmp)	40
HIGH LEVEL OUTPUT	(Volt)	3.4 (TIP) - 2.4 (MIN) (I_{MAX}=20 mA)
LOW LEVEL OUTPUT	(Volt)	0.2 (TIP) - 0.4 (MAX) (I_{MAX}=20 mA)
OUTPUT SIGNAL		Differential (SINGLE ENDED version available)
RESOLUTION		400 cycles per revolution (500 & 1000 CPR version available)
MAXIMUM FREQUENCY	(KHz)	60
INDEX VERSION		Available upon request

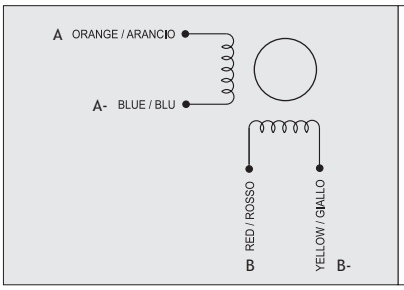

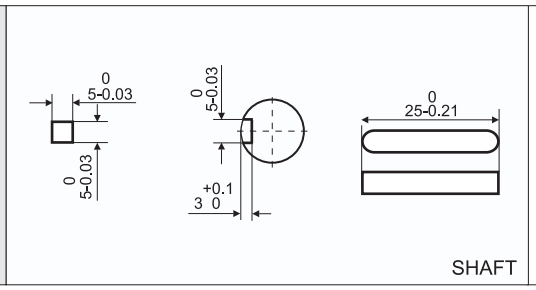

LEADS COLOR	ENCODER
BROWN	CHANNEL A-
BLUE	CHANNEL A+
PURPLE	CHANNEL B-
GREEN	CHANNEL B+
BLACK	GND (0 V)
RED	+ DC (5 V)
SHIELD	

Suggested R.T.A. drive model: X-PLUS L2

EM 3F1H-0XX0

Dimensions (Unit:mm)

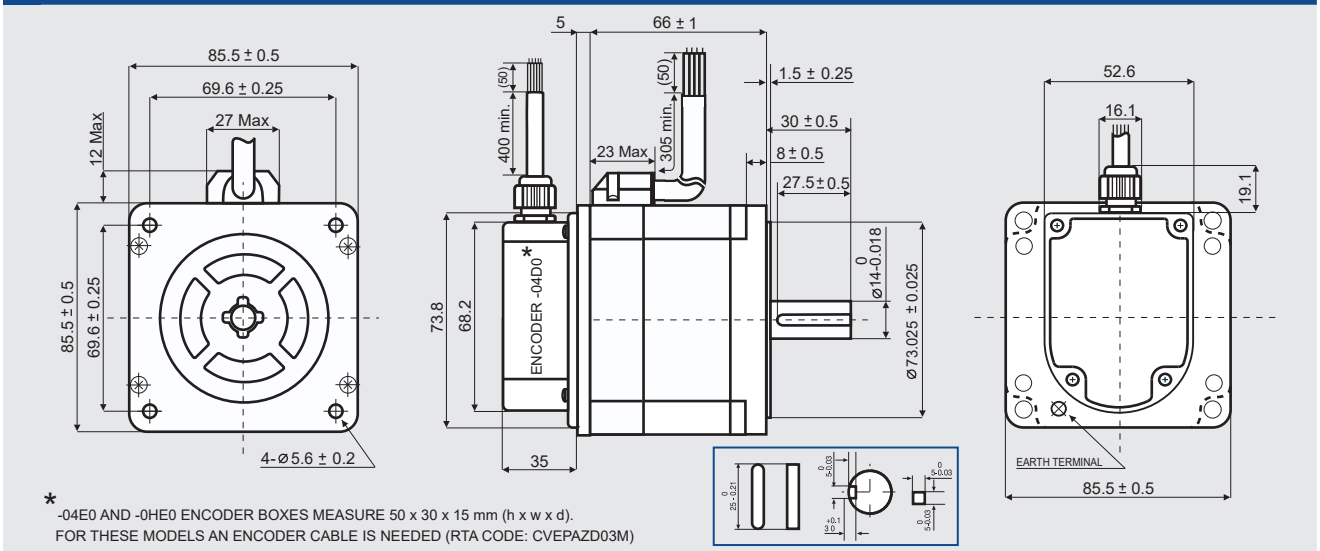

* -04E0 AND -0HE0 ENCODER BOXES MEASURE 50 x 30 x 15 mm (h x w x d).
FOR THESE MODELS AN ENCODER CABLE IS NEEDED (RTA CODE: CVEPAZD03M)

SANYO DENKI MOTOR FEATURES

MODEL		EM 3F1H-0XX0
SANYO DENKI MOTOR CODE		SM 2861-5225
BASIC STEP ANGLE		1.8°± 0.09°
BIPOLAR PARALLEL CURRENT	(Amp)	6.0
RESISTANCE	(Ohm)	0.29
INDUCTANCE	(mH)	1.7
BIPOLAR HOLDING TORQUE	(Ncm)	360
ROTOR INERTIA	($Kgm^2 \times 10^{-7}$)	1480
THEORETICAL ACCELERATION	(rad × $sec.^{-2}$)	24300
BACK E.M.F.	(V/Krpm)	60
MASS	(Kg)	1.7
INTERNATIONAL STANDARDS		UL, CSA
INSULATION VOLTAGE	(V)	250 VAC (350 VDC)
PROTECTION DEGREE - INSULATION CLASS		IP43 - F
LEADS CODE		V

TORQUE/SPEED CURVE

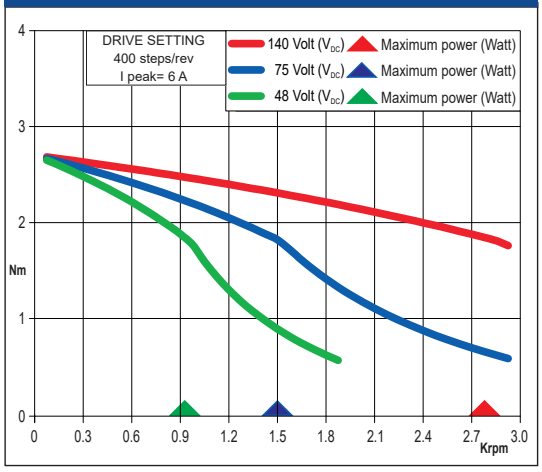

ENCODER OPTIONS:		EM 3F1H-04D0	EM 3F1H-04E0 *	EM 3F1H-0HE0 *
RESOLUTION		400 cpr	400 cpr	4000 cpr
INDEX		No	Yes	Yes
CURRENT CONSUMPTION	(mA)	50	50	85
HIGH LEVEL OUTPUT	(Volt)	5 (TIP) - 4.75 (MIN) (I_{MAX}=25mA)	3.4 (TIP) - 2.4 (MIN) (I_{MAX}=20mA)	3.4 (TIP) - 2.4 (MIN) (I_{MAX}=20mA)
LOW LEVEL OUTPUT	(Volt)	0.25 (TIP) - 0.6 (MAX) (I_{MAX}=25mA)	0.2 (TIP) - 0.4 (MAX) (I_{MAX}=20mA)	0.2 (TIP) - 0.4 (MAX) (I_{MAX}=20mA)
OUTPUT SIGNAL		Differential	Differential	Differential
MAXIMUM FREQUENCY	(KHz)	100	100	720
POWER SUPPLY VOLTAGE	(Volt)	5 V_{DC} ± 10%	5 V_{DC} ± 10%	5 V_{DC} ± 10%

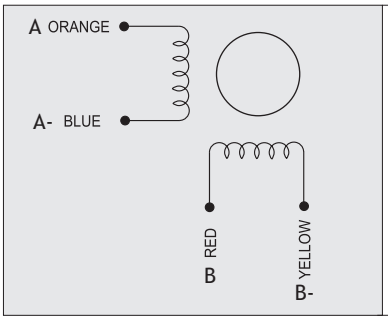

ENCODER CABLE / ENCODER PIN OUT

DESCRIPTION	04D0	04E0 PINS	0HE0 PINS
CHANNEL A+	BLUE	6 GREEN	6 GREEN
CHANNEL A-	BROWN	5 PURPLE	5 PURPLE
CHANNEL B+	GREEN	8 BLUE	8 BLUE
CHANNEL B-	PURPLE	7 BROWN	7 BROWN
+ DC (5V)	RED	2 RED	2 RED
GROUND	BLACK	3 BLACK	3 BLACK
INDEX+	/	10 ORANGE	10 ORANGE
INDEX-	/	9 WHITE	9 WHITE
	R.T.A. CABLE	CVEPAZD03M	CVEPAZD03M

Suggested R.T.A. drive series: NDC, ADW, HGD, PLUS

EM 3F2M-04D0

Dimensions (Unit:mm)

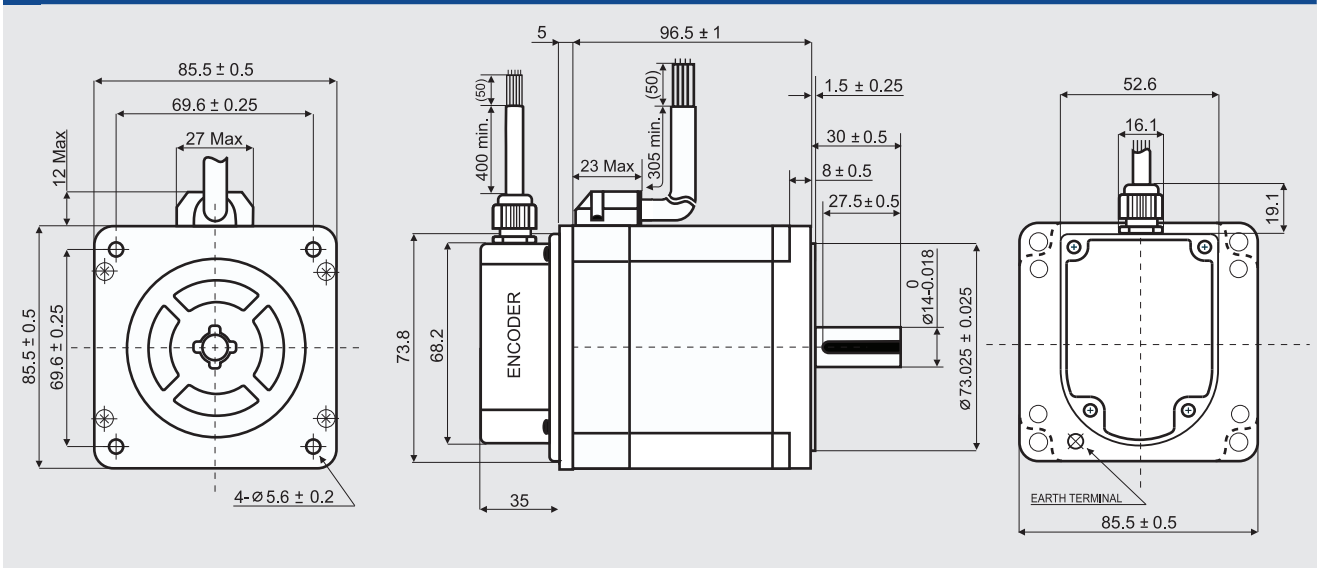

SANYO DENKI MOTOR FEATURES

MODEL		EM 3F2M-04D0
SANYO DENKI MOTOR CODE		SM 2862-5125
BASIC STEP ANGLE		1.8° ± 0.09°
BIPOLAR PARALLEL CURRENT	(Amp)	4.0
RESISTANCE	(Ohm)	0.83
INDUCTANCE	(mH)	6.4
BIPOLAR HOLDING TORQUE	(Ncm)	700
ROTOR INERTIA	($Kgm^2 \times 10^{-7}$)	3000
THEORETICAL ACCELERATION	($rad \times sec.^{-2}$)	23300
BACK E.M.F.	(V/Krpm)	175
MASS	(Kg)	2.9
INTERNATIONAL STANDARDS		UL, CSA
INSULATION VOLTAGE	(V)	250 VAC (350 VDC)
PROTECTION DEGREE - INSULATION CLASS		IP43 - F
LEADS CODE		V

TORQUE/SPEED CURVE

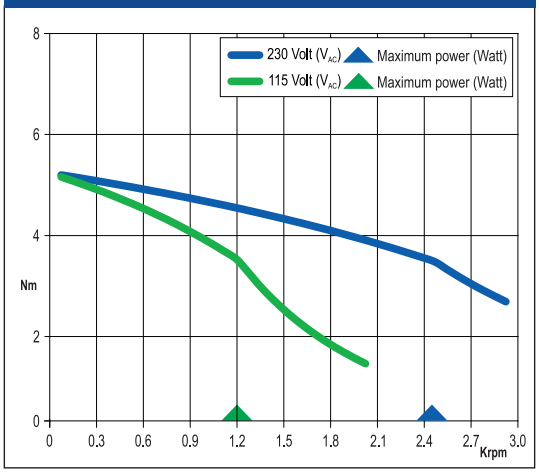

ENCODER FEATURES

POWER SUPPLY VOLTAGE	(Volt)	5 V_{DC} ± 5%
CURRENT CONSUMPTION	(mAmp)	40
HIGH LEVEL OUTPUT	(Volt)	3.4 (TIP) - 2.4 (MIN) (I_{MAX}=20 mA)
LOW LEVEL OUTPUT	(Volt)	0.2 (TIP) - 0.4 (MAX) (I_{MAX}=20 mA)
OUTPUT SIGNAL		Differential (SINGLE ENDED version available)
RESOLUTION		400 cycles per revolution (500 & 1000 CPR version available)
MAXIMUM FREQUENCY	(KHz)	60
INDEX VERSION		Available upon request

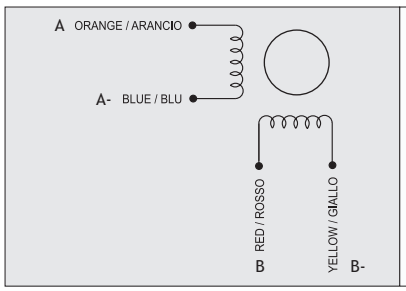

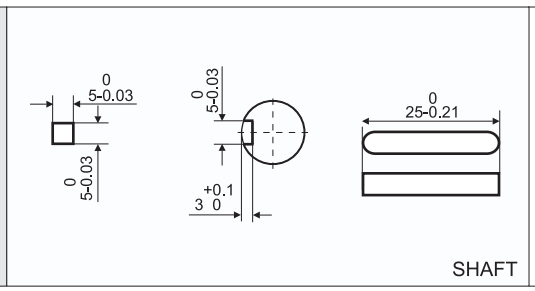

LEADS COLOR	ENCODER
BROWN	CHANNEL A-
BLUE	CHANNEL A+
PURPLE	CHANNEL B-
GREEN	CHANNEL B+
BLACK	GND (0 V)
RED	+ DC (5 V)
SHIELD	

Suggested R.T.A. drive model: 230 Vac X-PLUS

EM 3F2H-0XX0

Dimensions (Unit:mm)

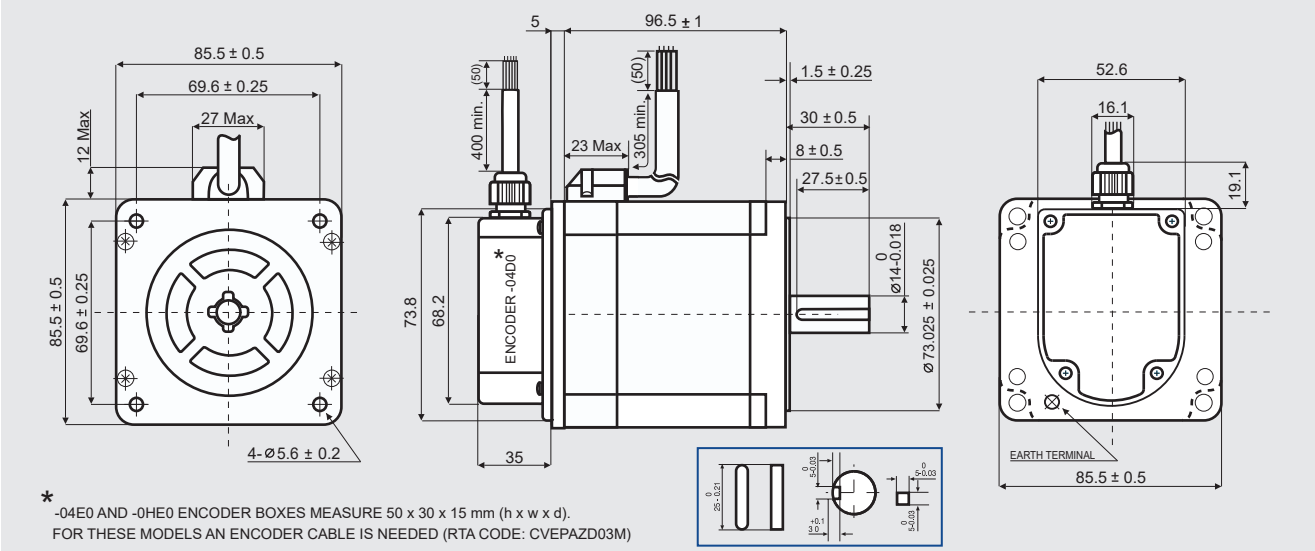

* -04E0 AND -0HE0 ENCODER BOXES MEASURE 50 x 30 x 15 mm (h x w x d).
FOR THESE MODELS AN ENCODER CABLE IS NEEDED (RTA CODE: CVEPAZD03M)

SANYO DENKI MOTOR FEATURES

MODEL		EM 3F2H-0XX0
SANYO DENKI MOTOR CODE		SM 2862-5225
BASIC STEP ANGLE		1.8° ± 0.09°
BIPOLAR PARALLEL CURRENT	(A)	6.0
RESISTANCE	(Ohm)	0.36
INDUCTANCE	(mH)	2.8
BIPOLAR HOLDING TORQUE	(Ncm)	700
ROTOR INERTIA	($Kgm^2 \times 10^{-7}$)	3000
THEORETICAL ACCELERATION	(rad × sec.$^{-2}$)	23300
BACK E.M.F.	(V/Krpm)	120
MASS	(Kg)	2.9
INTERNATIONAL STANDARDS		UL, CSA
INSULATION VOLTAGE	(V)	250 VAC (350 VDC)
PROTECTION DEGREE - INSULATION CLASS		IP43 - F
LEADS CODE		V

TORQUE/SPEED CURVE

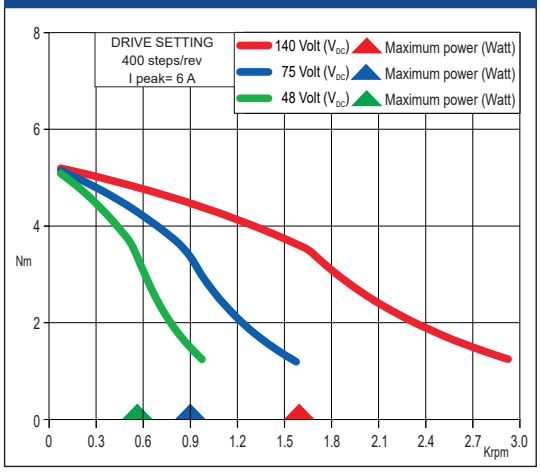

ENCODER OPTIONS:		EM 3F2H-04D0	EM 3F2H-04E0 *	EM 3F2H-0HE0 *
RESOLUTION		400 cpr	400 cpr	4000 cpr
INDEX		No	Yes	Yes
CURRENT CONSUMPTION	(mA)	50	50	85
HIGH LEVEL OUTPUT	(Volt)	5 (TIP) - 4.75 (MIN) (I_{MAX}=25mA)	3.4 (TIP) - 2.4 (MIN) (I_{MAX}=20mA)	3.4 (TIP) - 2.4 (MIN) (I_{MAX}=20mA)
LOW LEVEL OUTPUT	(Volt)	0.25 (TIP) - 0.6 (MAX) (I_{MAX}=25mA)	0.2 (TIP) - 0.4 (MAX) (I_{MAX}=20mA)	0.2 (TIP) - 0.4 (MAX) (I_{MAX}=20mA)
OUTPUT SIGNAL		Differential	Differential	Differential
MAXIMUM FREQUENCY	(KHz)	100	100	720
POWER SUPPLY VOLTAGE	(Volt)	5 V_{DC} ± 10%	5 V_{DC} ± 10%	5 V_{DC} ± 10%

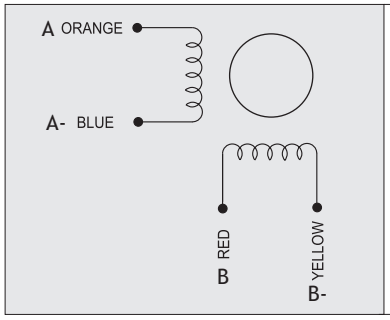

ENCODER CABLE / ENCODER PIN OUT

DESCRIPTION	04D0	04E0 PINS		0HE0 PINS	
CHANNEL A+	BLUE	6	GREEN	6	GREEN
CHANNEL A-	BROWN	5	PURPLE	5	PURPLE
CHANNEL B+	GREEN	8	BLUE	8	BLUE
CHANNEL B-	PURPLE	7	BROWN	7	BROWN
+ DC (5V)	RED	2	RED	2	RED
GROUND	BLACK	3	BLACK	3	BLACK
INDEX+	/	10	ORANGE	10	ORANGE
INDEX-	/	9	WHITE	9	WHITE
	R.T.A. CABLE		CVEPAZD03M		CVEPAZD03M

Suggested R.T.A. drive series: NDC, ADW, HGD, PLUS

EM 3F3H-0XX0

Dimensions (Unit:mm)

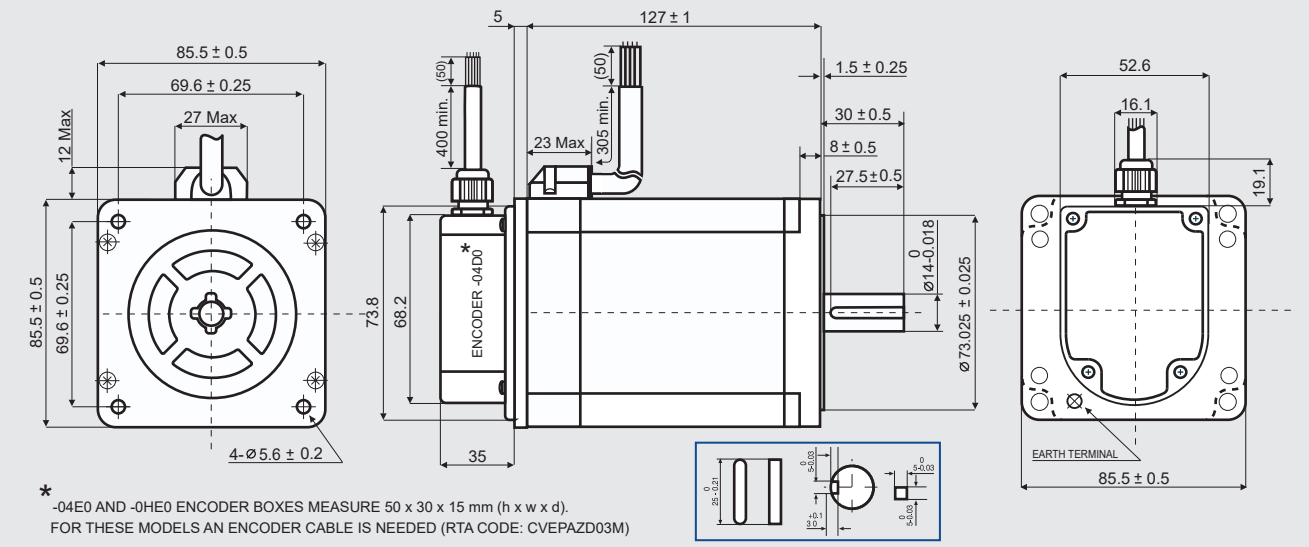

* -04E0 AND -0HE0 ENCODER BOXES MEASURE 50 x 30 x 15 mm (h x w x d).
FOR THESE MODELS AN ENCODER CABLE IS NEEDED (RTA CODE: CVEPAZD03M)

SANYO DENKI MOTOR FEATURES

MODEL		EM 3F3H-0XX0
SANYO DENKI MOTOR CODE		SM 2863-5225
BASIC STEP ANGLE		1.8° ± 0.09°
BIPOLAR PARALLEL CURRENT	(Amp)	6.0
RESISTANCE	(Ohm)	0.46
INDUCTANCE	(mH)	3.8
BIPOLAR HOLDING TORQUE	(Ncm)	920
ROTOR INERTIA	($Kgm^2 \times 10^{-7}$)	4500
THEORETICAL ACCELERATION	(rad × sec.$^{-2}$)	20500
BACK E.M.F.	(V/Krpm)	161
MASS	(Kg)	4.0
INTERNATIONAL STANDARDS		UL, CSA
INSULATION VOLTAGE	(V)	250 VAC (350 VDC)
PROTECTION DEGREE - INSULATION CLASS		IP43 - F
LEADS CODE		V

TORQUE/SPEED CURVE

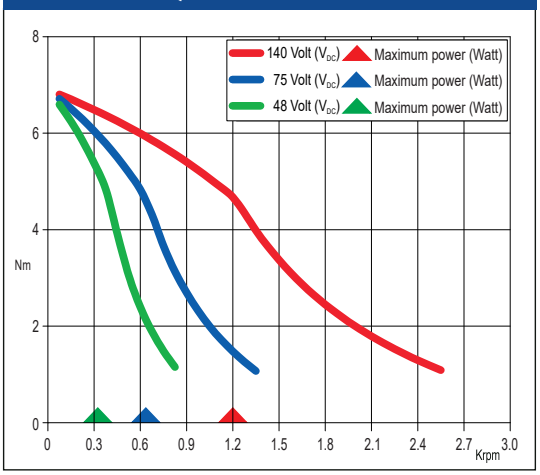

ENCODER OPTIONS:		EM 3F3H-04D0	EM 3F3H-04E0 *	EM 3F3H-0HE0 *
RESOLUTION		400 cpr	400 cpr	4000 cpr
INDEX		No	Yes	Yes
CURRENT CONSUMPTION	(mA)	50	50	85
HIGH LEVEL OUTPUT	(Volt)	5 (TIP) - 4.75 (MIN) (I_{MAX}=25mA)	3.4 (TIP) - 2.4 (MIN) (I_{MAX}=20mA)	3.4 (TIP) - 2.4 (MIN) (I_{MAX}=20mA)
LOW LEVEL OUTPUT	(Volt)	0.25 (TIP) - 0.6 (MAX) (I_{MAX}=25mA)	0.2 (TIP) - 0.4 (MAX) (I_{MAX}=20mA)	0.2 (TIP) - 0.4 (MAX) (I_{MAX}=20mA)
OUTPUT SIGNAL		Differential	Differential	Differential
MAXIMUM FREQUENCY	(KHz)	100	100	720
POWER SUPPLY VOLTAGE	(Volt)	5 V_{DC} ± 10%	5 V_{DC} ± 10%	5 V_{DC} ± 10%

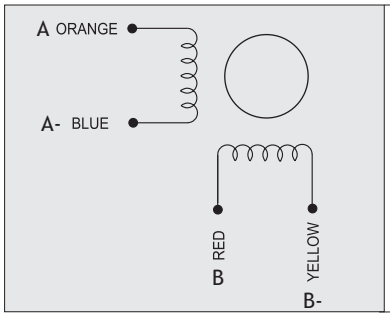

ENCODER CABLE / ENCODER PIN OUT

DESCRIPTION	04D0	04E0 PINS	0HE0 PINS
CHANNEL A+	BLUE	6 GREEN	6 GREEN
CHANNEL A-	BROWN	5 PURPLE	5 PURPLE
CHANNEL B+	GREEN	8 BLUE	8 BLUE
CHANNEL B-	PURPLE	7 BROWN	7 BROWN
+ DC (5V)	RED	2 RED	2 RED
GROUND	BLACK	3 BLACK	3 BLACK
INDEX+	/	10 ORANGE	10 ORANGE
INDEX-	/	9 WHITE	9 WHITE
	R.T.A. CABLE	CVEPAZD03M	CVEPAZD03M

Suggested R.T.A. drive series: NDC, ADW, HGD, PLUS

EM 3F3M-14D0

Dimensions (Unit:mm)

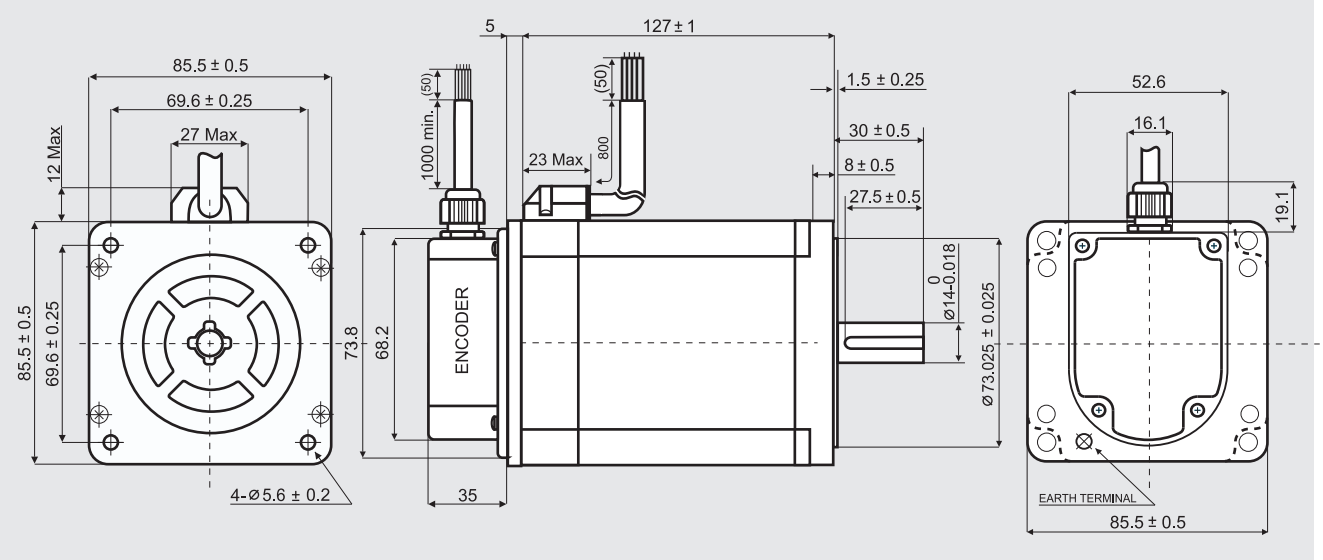

SANYO DENKI MOTOR FEATURES

MODEL		EM 3F3M-14D0
SANYO DENKI MOTOR CODE		SM 2863-5126
BASIC STEP ANGLE		1.8° ± 0.09°
BIPOLAR PARALLEL CURRENT	(Amp)	4.0
RESISTANCE	(Ohm)	1.0
INDUCTANCE	(mH)	7.9
BIPOLAR HOLDING TORQUE	(Ncm)	920
ROTOR INERTIA	($Kgm^2 \times 10^{-7}$)	4500
THEORETICAL ACCELERATION	(rad × $sec.^{-2}$)	20500
BACK E.M.F.	(V/Krpm)	241
MASS	(Kg)	4.0
INTERNATIONAL STANDARDS		UL, CSA
INSULATION VOLTAGE	(V)	250 VAC (350 VDC)
PROTECTION DEGREE - INSULATION CLASS		IP43 - F
LEADS CODE		V

TORQUE/SPEED CURVE

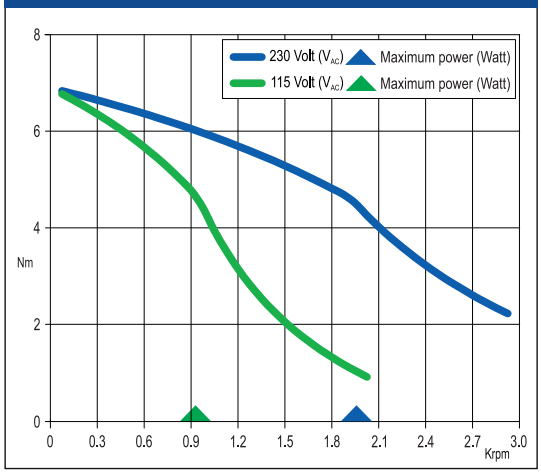

ENCODER FEATURES

POWER SUPPLY VOLTAGE	(Volt)	5 V_{DC} ± 5%
CURRENT CONSUMPTION	(mAmp)	40
HIGH LEVEL OUTPUT	(Volt)	3.4 (TIP) - 2.4 (MIN) (I_{MAX}=20 mA)
LOW LEVEL OUTPUT	(Volt)	0.2 (TIP) - 0.4 (MAX) (I_{MAX}=20 mA)
OUTPUT SIGNAL		Differential (SINGLE ENDED version available)
RESOLUTION		400 cycles per revolution (500 & 1000 CPR version available)
MAXIMUM FREQUENCY	(KHz)	60
INDEX VERSION		Available upon request

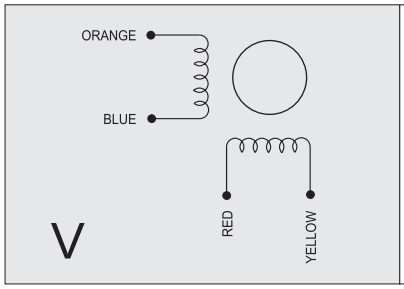

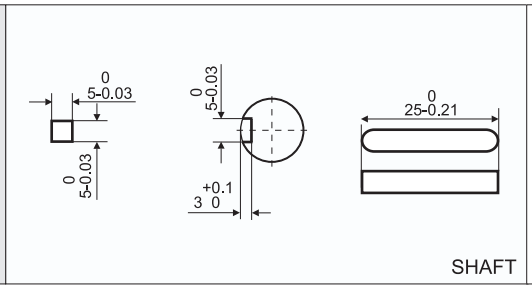

LEADS COLOR	ENCODER
BROWN	CHANNEL A-
BLUE	CHANNEL A+
PURPLE	CHANNEL B-
GREEN	CHANNEL B+
BLACK	GND (0 V)
RED	+ DC (5 V)
SHIELD	

Suggested R.T.A. drive model: 230 Vac X-PLUS

STEPPING MOTORS

TRADITIONAL STEPPING MOTORS WITH BRAKE

103-H5210-4512.B

Dimensions (Unit:mm)

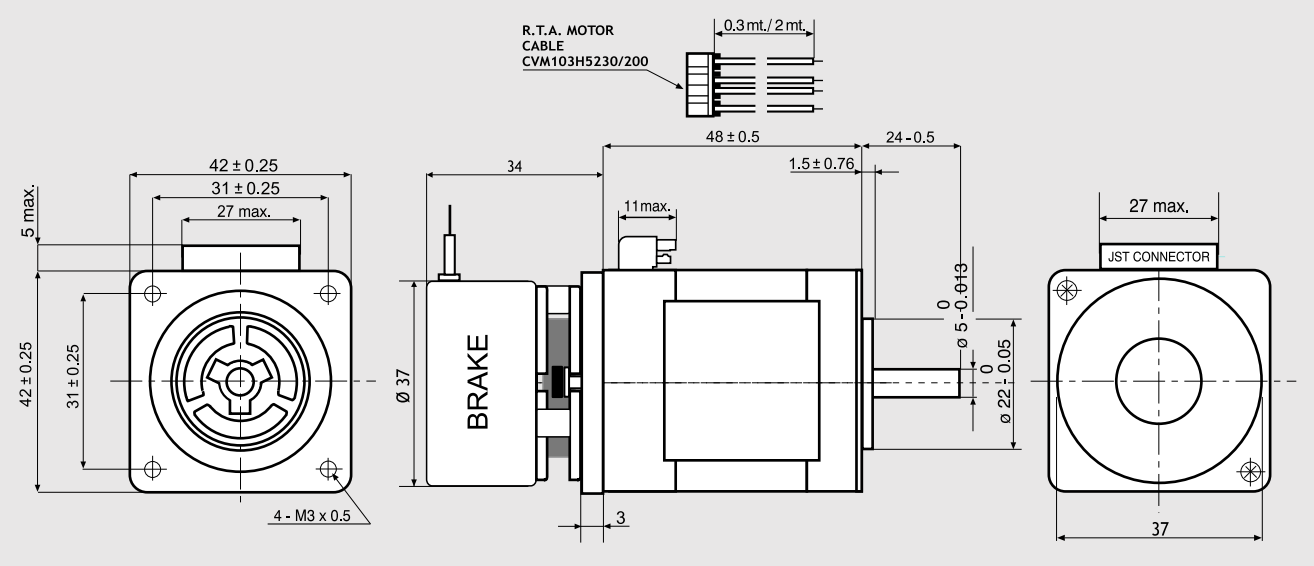

SANYO DENKI MOTOR FEATURES

MODEL		103-H5210-4512.B
SANYO DENKI MOTOR CODE		103-H5210-4512
BASIC STEP ANGLE		1.8° ± 0.09°
BIPOLAR PARALLEL CURRENT	(Amp)	2.0
RESISTANCE	(Ohm)	1.25
INDUCTANCE	(mH)	2.4
BIPOLAR HOLDING TORQUE	(Ncm)	51
ROTOR INERTIA	($Kgm^2 \times 10^{-7}$)	74
THEORETICAL ACCELERATION	($rad \times sec.^{-2}$)	69000
BACK E.M.F.	(V/Krpm)	25
MASS	(Kg)	0.55
LEADS CODE		V

TORQUE/SPEED CURVE

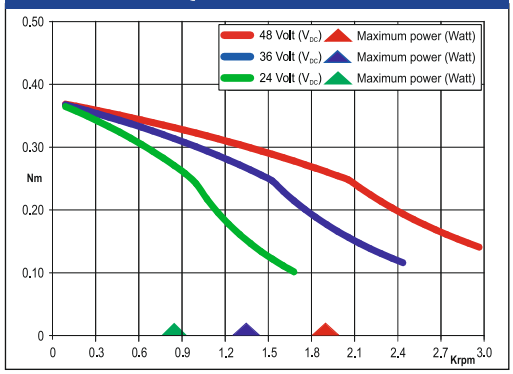

103-H5210-4512 MOTOR NEEDS CVM103H5230 OR CVM103H52200 R.T.A. CABLES. CONTACT R.T.A. FOR FURTHER DETAILS.

BRAKE FEATURES

STATIC TORQUE	(Nm)	0.24
DUTY CYCLE		50% max.
VOLTAGE	(Volt)	24 VDC
POWER	(W)	5
RELEASE TIME	(ms)	50

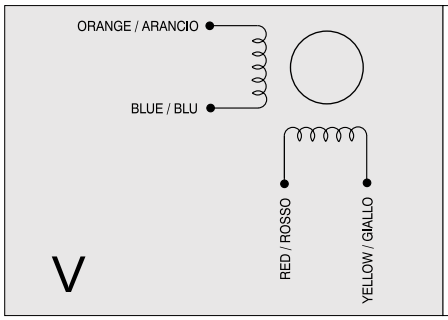

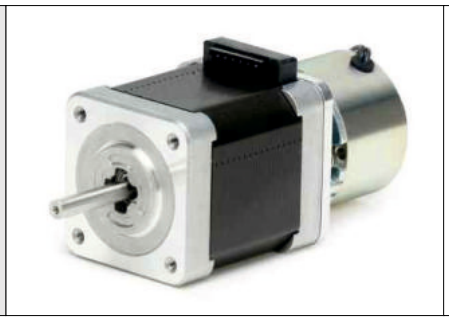

Suggested R.T.A. drive series: BSD, CSD, FLEX-DRIVE

103-H7123-5010.B

Dimensions (Unit:mm)

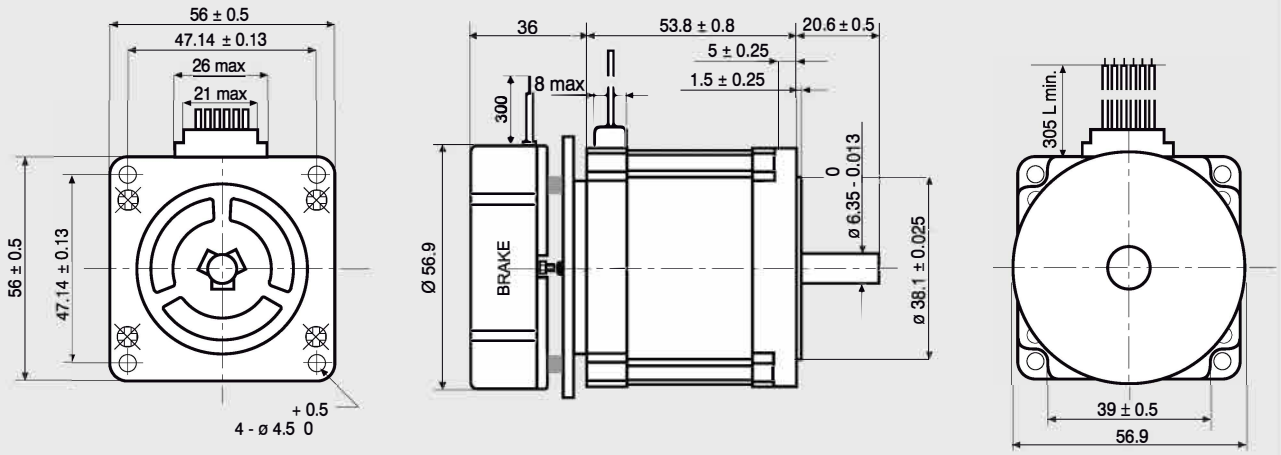

SANYO DENKI MOTOR FEATURES

MODEL		103-H7123-5010.B
SANYO DENKI MOTOR CODE		103-H7123-5010
BASIC STEP ANGLE		1.8° ± 0.09°
BIPOLAR PARALLEL CURRENT	(Amp)	2.0
UNIPOLAR PARALLEL CURRENT	(Amp)	
RESISTANCE	(Ohm)	0.8
INDUCTANCE	(mH)	3.8
BIPOLAR HOLDING TORQUE	(Ncm)	85
UNIPOLAR HOLDING TORQUE	(Ncm)	
ROTOR INERTIA	($Kgm^2 \times 10^{-7}$)	210
THEORETICAL ACCELERATION	(rad × $sec.^{-2}$)	38500
BACK E.M.F.	(V/Krpm)	31
MASS	(Kg)	1.15
LEADS CODE		V

TORQUE/SPEED CURVE

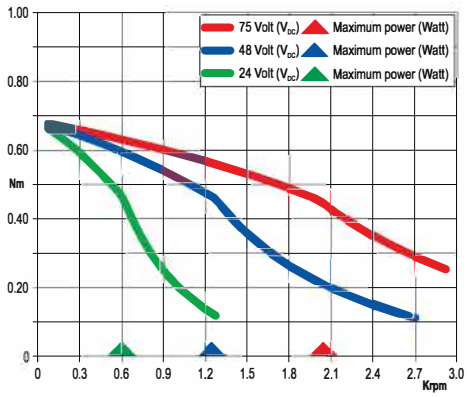

BRAKE FEATURES

STATIC TORQUE	(Nm)	3.3
DUTY CYCLE		50% max.
VOLTAGE	(Volt)	24 VDC
POWER	(W)	11
RELEASE TIME	(ms)	300

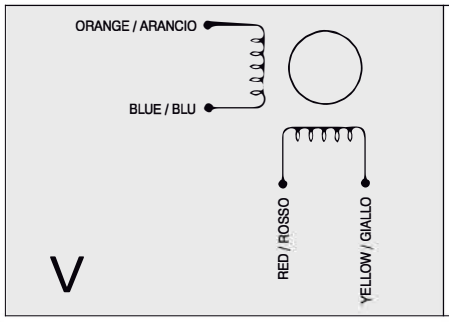

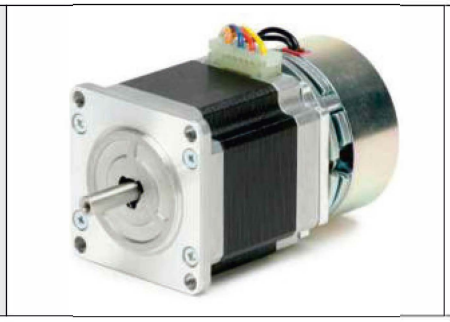

Suggested R.T.A. drive series: BSD, CSD, NDC, ADW, HGD, FLEX-DRIVE

103-H7123-0710.B

Dimensions (Unit:mm)

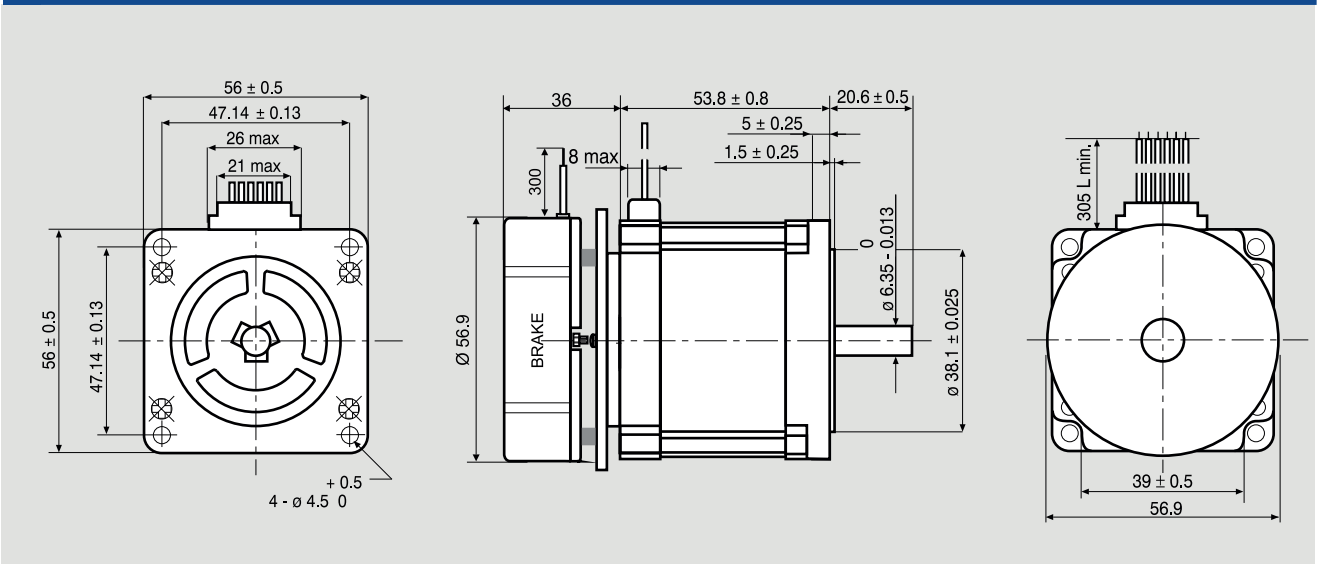

SANYO DENKI MOTOR FEATURES

MODEL		103-H7123-0710.B
SANYO DENKI MOTOR CODE		103-H7123-0710
BASIC STEP ANGLE		1.8° ± 0.09°
BIPOLAR PARALLEL CURRENT	(Amp)	2.2*
UNIPOLAR PARALLEL CURRENT	(Amp)	3.0
RESISTANCE	(Ohm)	0.77
INDUCTANCE	(mH)	1.6
BIPOLAR HOLDING TORQUE	(Ncm)	110
UNIPOLAR HOLDING TORQUE	(Ncm)	85
ROTOR INERTIA	($Kgm^2 \times 10^{-7}$)	210
THEORETICAL ACCELERATION	(rad × sec.$^{-2}$)	50000
BACK E.M.F.	(V/Krpm)	20
MASS	(Kg)	1.15
LEADS CODE		IV

TORQUE/SPEED CURVE

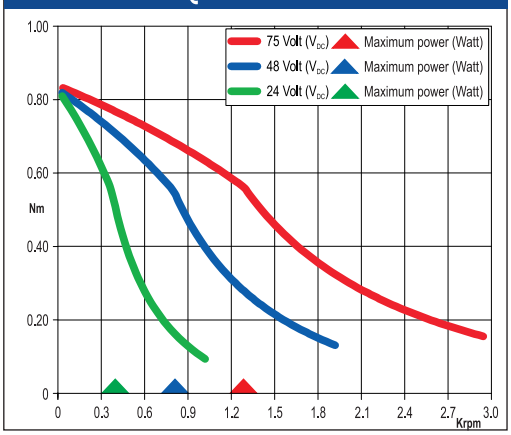

(*)Bipolar series connection.

BRAKE FEATURES

STATIC TORQUE	(Nm)	3.3
DUTY CYCLE		50% max.
VOLTAGE	(Volt)	24 VDC
POWER	(W)	11
RELEASE TIME	(ms)	300

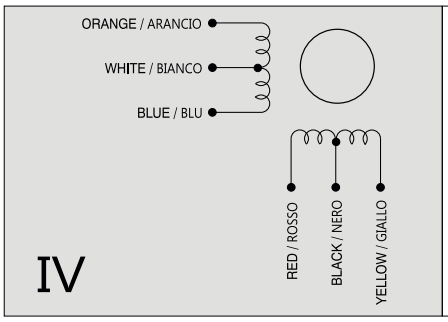

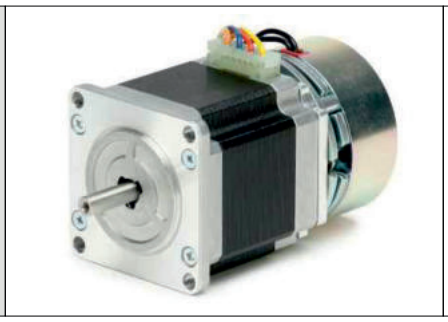

Suggested R.T.A. drive series: BSD, CSD, NDC, ADW, HGD, FLEX-DRIVE

103-H7123-1711.B

Dimensions (Unit:mm)

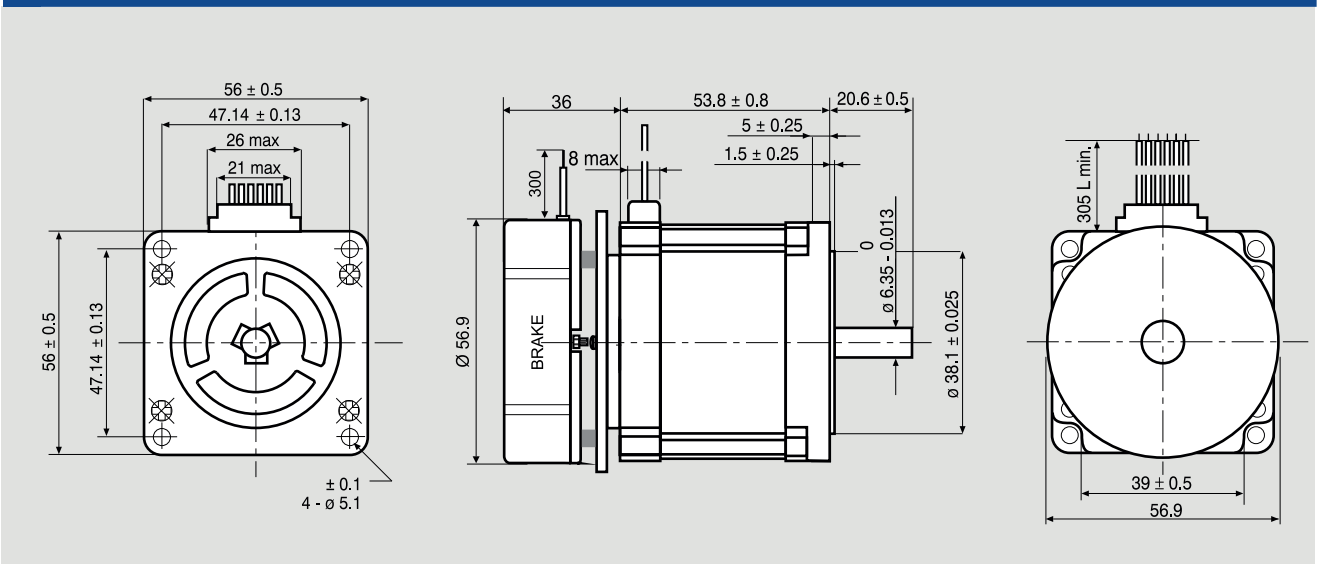

SANYO DENKI MOTOR FEATURES

MODEL		103-H7123-1711.B
SANYO DENKI MOTOR CODE		103-H7123-1711
BASIC STEP ANGLE		1.8° ± 0.09°
BIPOLAR PARALLEL CURRENT	(Amp)	4.0
UNIPOLAR PARALLEL CURRENT	(Amp)	
RESISTANCE	(Ohm)	0.41
INDUCTANCE	(mH)	1.6
BIPOLAR HOLDING TORQUE	(Ncm)	110
UNIPOLAR HOLDING TORQUE	(Ncm)	
ROTOR INERTIA	($Kgm^2 \times 10^{-7}$)	210
THEORETICAL ACCELERATION	(rad × $sec.^{-2}$)	50000
BACK E.M.F.	(V/Krpm)	20
MASS	(Kg)	1.15
LEADS CODE		V

TORQUE/SPEED CURVE

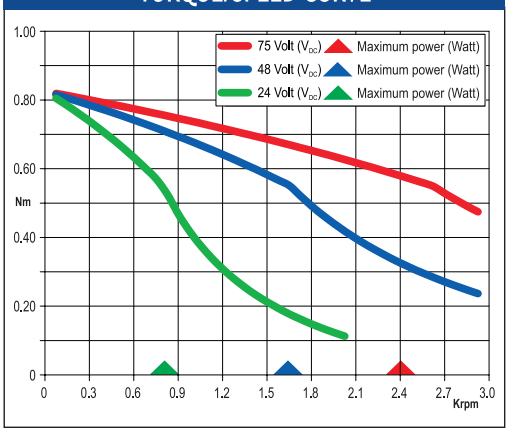

BRAKE FEATURES

STATIC TORQUE	(Nm)	3.3
DUTY CYCLE		50% max.
VOLTAGE	(Volt)	24 VDC
POWER	(W)	11
RELEASE TIME	(ms)	300

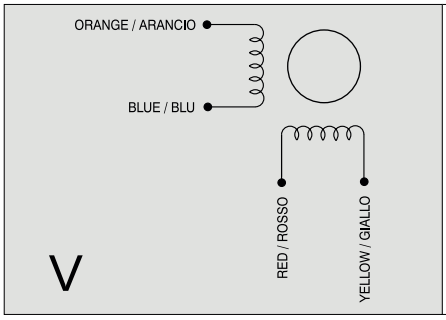

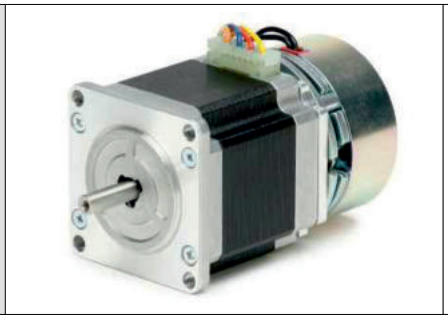

Suggested R.T.A. drive series: BSD, CSD, NDC, ADW, HGD, FLEX-DRIVE

103-H7126-0710.B

Dimensions (Unit:mm)

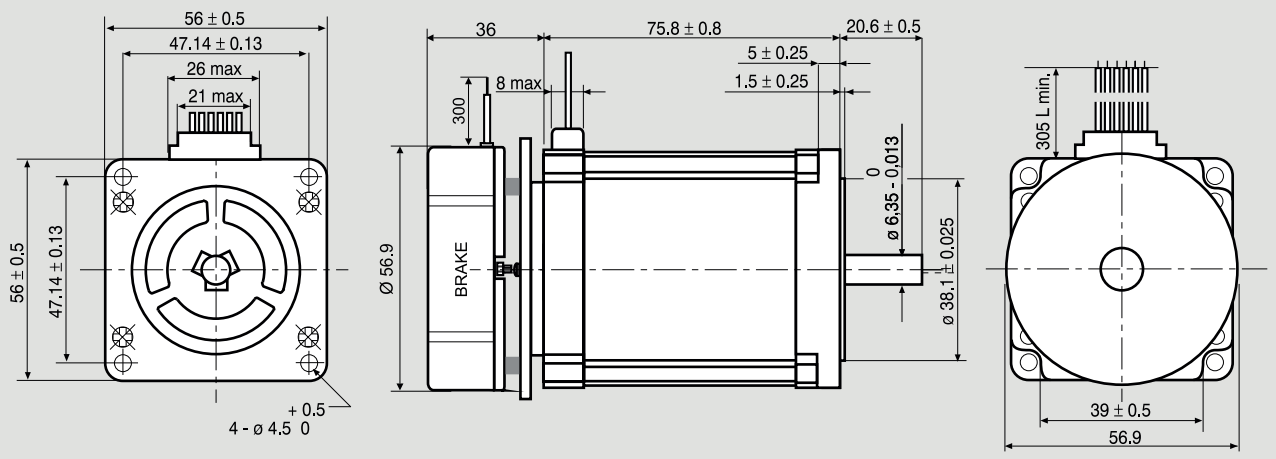

SANYO DENKI MOTOR FEATURES

MODEL		103-H7126-0710.B
SANYO DENKI MOTOR CODE		103-H7126-0710
BASIC STEP ANGLE		1.8° ± 0.09°
BIPOLAR PARALLEL CURRENT	(Amp)	2.2*
UNIPOLAR PARALLEL CURRENT	(Amp)	3.0
RESISTANCE	(Ohm)	0.9
INDUCTANCE	(mH)	2.2
BIPOLAR HOLDING TORQUE	(Ncm)	165
UNIPOLAR HOLDING TORQUE	(Ncm)	130
ROTOR INERTIA	($Kgm^2 \times 10^{-7}$)	360
THEORETICAL ACCELERATION	(rad × sec.$^{-2}$)	45800
BACK E.M.F.	(V/Krpm)	31
MASS	(Kg)	1.5
LEADS CODE		IV

TORQUE/SPEED CURVE

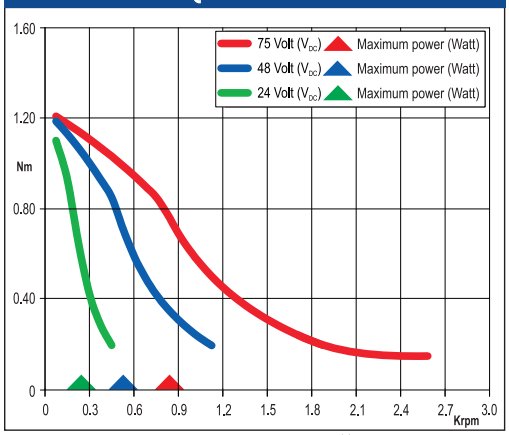

(*)Bipolar series connection.

BRAKE FEATURES

STATIC TORQUE	(Nm)	3.3
DUTY CYCLE		50% max.
VOLTAGE	(Volt)	24 VDC
POWER	(W)	11
RELEASE TIME	(ms)	300

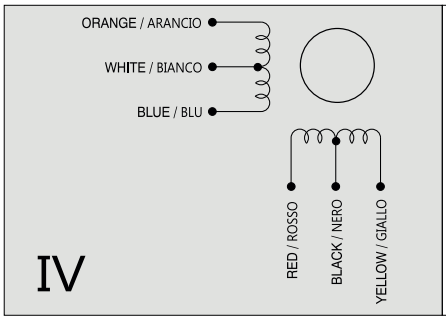

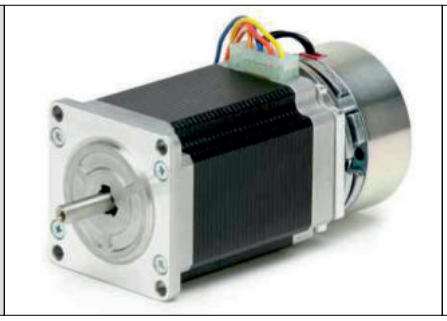

Suggested R.T.A. drive series: BSD, CSD, NDC, ADW, HGD, FLEX-DRIVE

103-H7126-1710.B

Dimensions (Unit:mm)

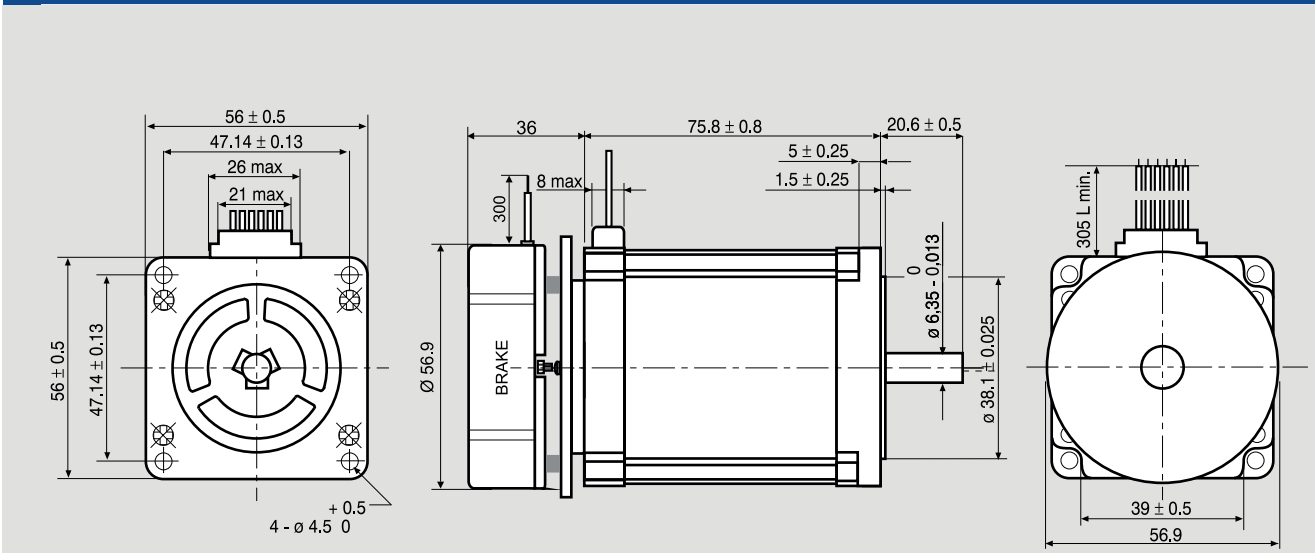

SANYO DENKI MOTOR FEATURES

MODEL		103-H7126-1710.B
SANYO DENKI MOTOR CODE		103-H7126-1710
BASIC STEP ANGLE		1.8° ± 0.09°
BIPOLAR PARALLEL CURRENT	(Amp)	4.0
UNIPOLAR PARALLEL CURREN T	(Amp)	
RESISTANCE	(Ohm)	0.48
INDUCTANCE	(mH)	2.2
BIPOLAR HOLDING TORQUE	(Ncm)	165
UNIPOLAR HOLDING TORQUE	(Ncm)	
ROTOR INERTIA	($Kgm^2 \times 10^{-7}$)	360
THEORETICAL ACCELERATION	($rad \times sec.^{-2}$)	45800
BACK E.M.F.	(V/Krpm)	31
MASS	(Kg)	1.5
LEADS CODE		V

TORQUE/SPEED CURVE

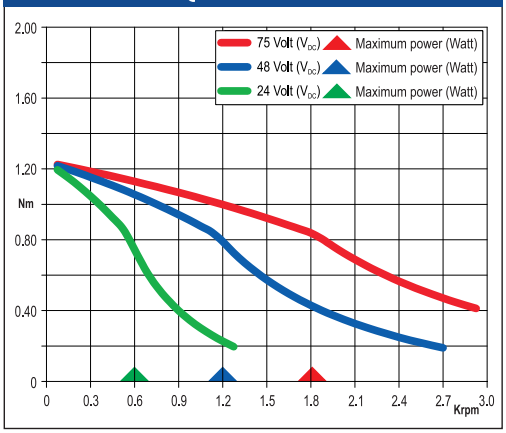

BRAKE FEATURES

STATIC TORQUE	(Nm)	3.3
DUTY CYCLE		50% max.
VOLTAGE	(Volt)	24 VDC
POWER	(W)	11
RELEASE TIME	(ms)	300

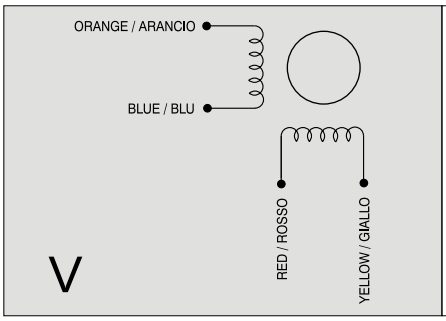

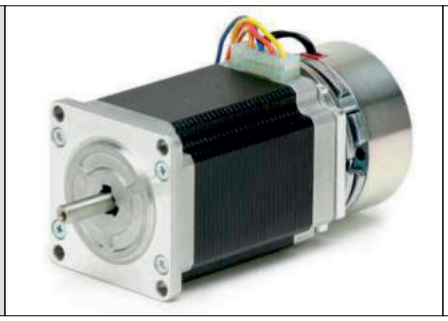

Suggested R.T.A. drive series: BSD, CSD, NDC, ADW, HGD, FLEX-DRIVE

103-H7823-1714.B

Dimensions (Unit:mm)

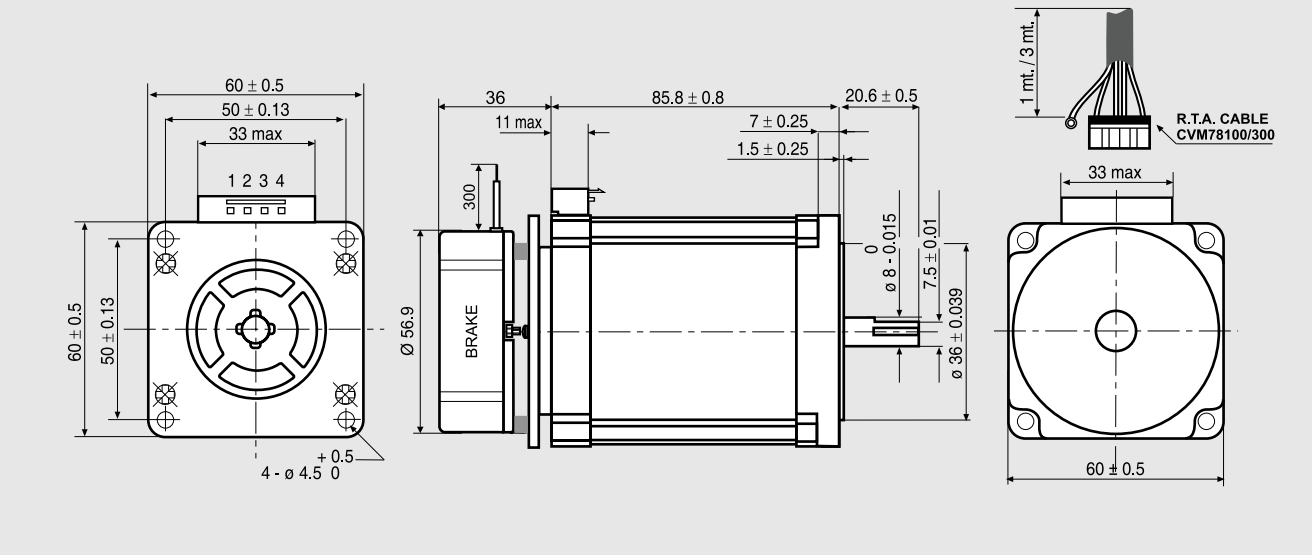

SANYO DENKY FEATURES

MODEL		103-H7823-1714.B
SANYO DENKI MOTOR CODE		103-H7823-1714
BASIC STEP ANGLE		1.8° ± 0.09°
BIPOLAR PARALLEL CURRENT	(Amp)	4.0
UNIPOLAR PARALLEL CURRENT	(Amp)	
RESISTANCE	(Ohm)	0.65
INDUCTANCE	(mH)	2.4
BIPOLAR HOLDING TORQUE	(Ncm)	300
UNIPOLAR HOLDING TORQUE	(Ncm)	
ROTOR INERTIA	($Kgm^2 \times 10^{-7}$)	840
THEORETICAL ACCELERATION	(rad × $sec.^{-2}$)	35700
BACK E.M.F.	(V/Krpm)	75
MASS	(Kg)	1.9
LEADS CODE		V

TORQUE/SPEED CURVE

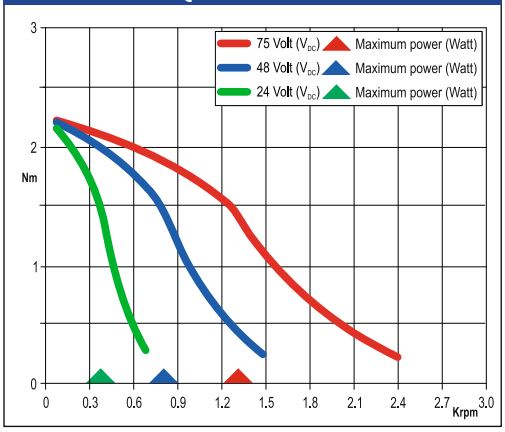

BRAKE FEATURES

STATIC TORQUE	(Nm)	3.3
DUTY CYCLE		50% max.
VOLTAGE	(Volt)	24 VDC
POWER	(W)	11
RELEASE TIME	(ms)	300

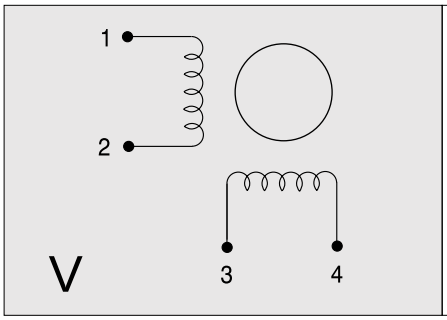

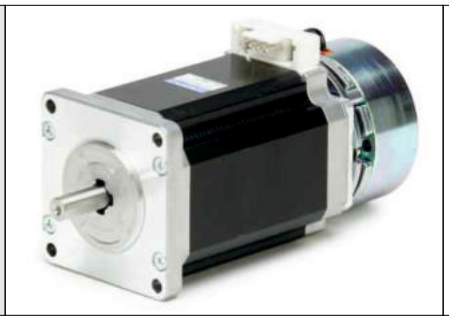

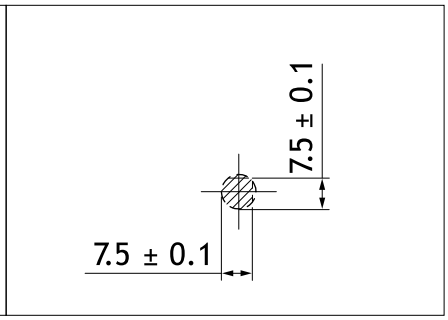

Suggested R.T.A. drive series: BSD, CSD, NDC, ADW, HGD, PLUS, FLEX-DRIVE

103-H7826-1612.B

SANYO DENKI
SANMOTION

Dimensions (Unit:mm)

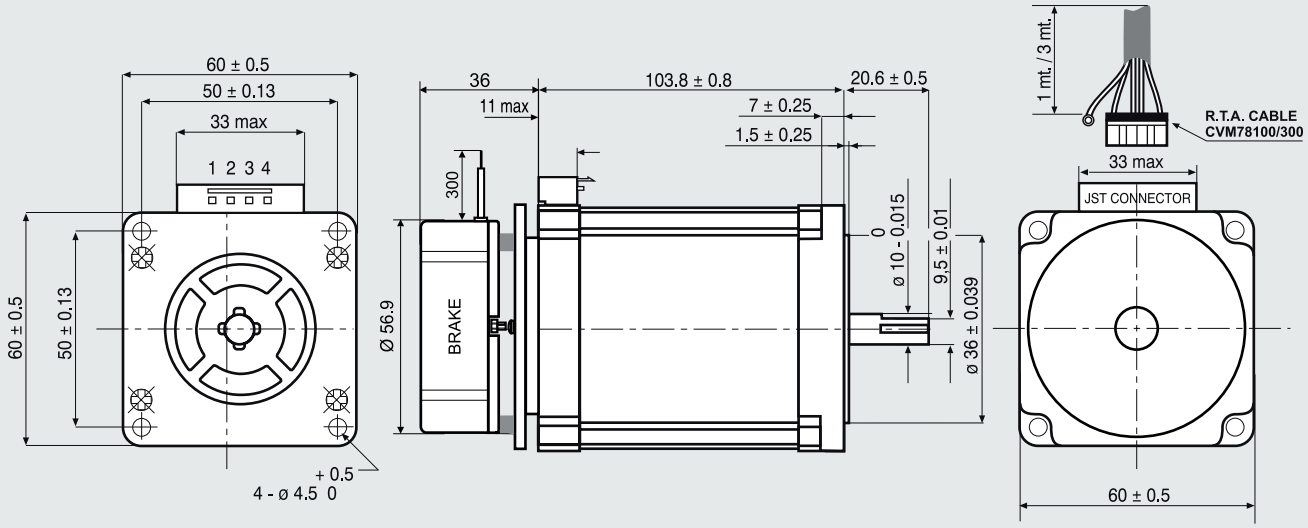

FEATURES

MODEL		103-H7826-1612.B
SANYO DENKI MOTOR CODE		103-H7826-1612
BASIC STEP ANGLE		1.8° ± 0.09°
BIPOLAR CURRENT	(Amp)	6.0
UNIPOLAR CURRENT	(Amp)	
RESISTANCE	(Ohm)	0.43
INDUCTANCE	(mH)	1.45
BIPOLAR HOLDING TORQUE	(Ncm)	380
UNIPOLAR HOLDING TORQUE	(Ncm)	
ROTOR INERTIA	(Kgm ^{2} x 10 $^{-7}$)	1080
THEORETICAL ACCELERATION	(rad x sec.$^{-2}$)	35200
BACK E.M.F.	(V/Krpm)	70
MASS	(Kg)	1.65
LEADS CODE		V

TORQUE/SPEED CURVE

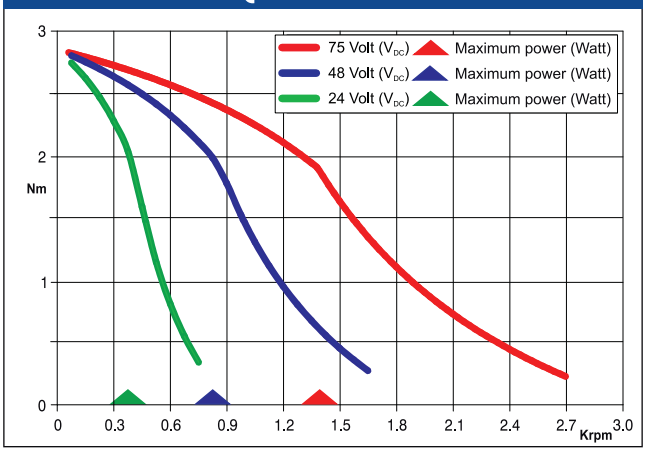

BRAKE FEATURES

STATIC TORQUE	(Nm)	3.3
DUTY CYCLE		50% max.
VOLTAGE	(Volt)	24 VDC
POWER	(W)	11
RELEASE TIME	(ms)	100

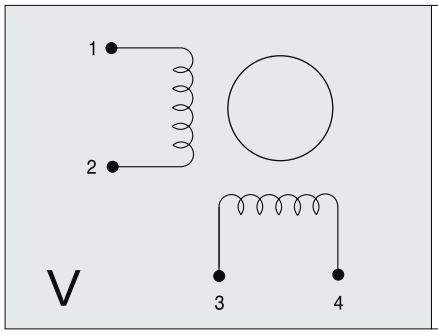

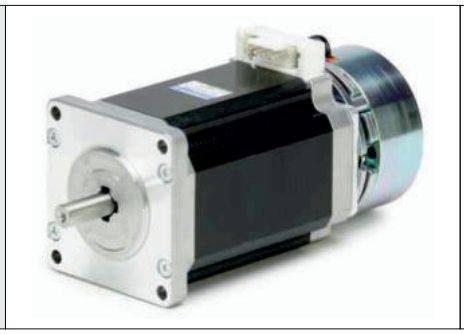

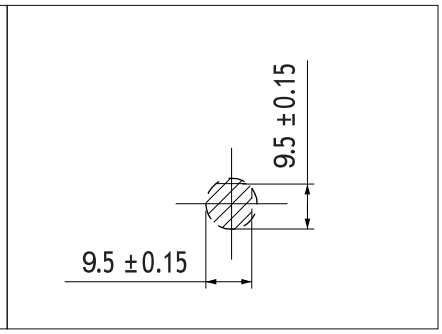

Suggested R.T.A. drive series: NDC, ADW, HGD, PLUS

SM 2861-5025.B

Dimensions (Unit:mm)

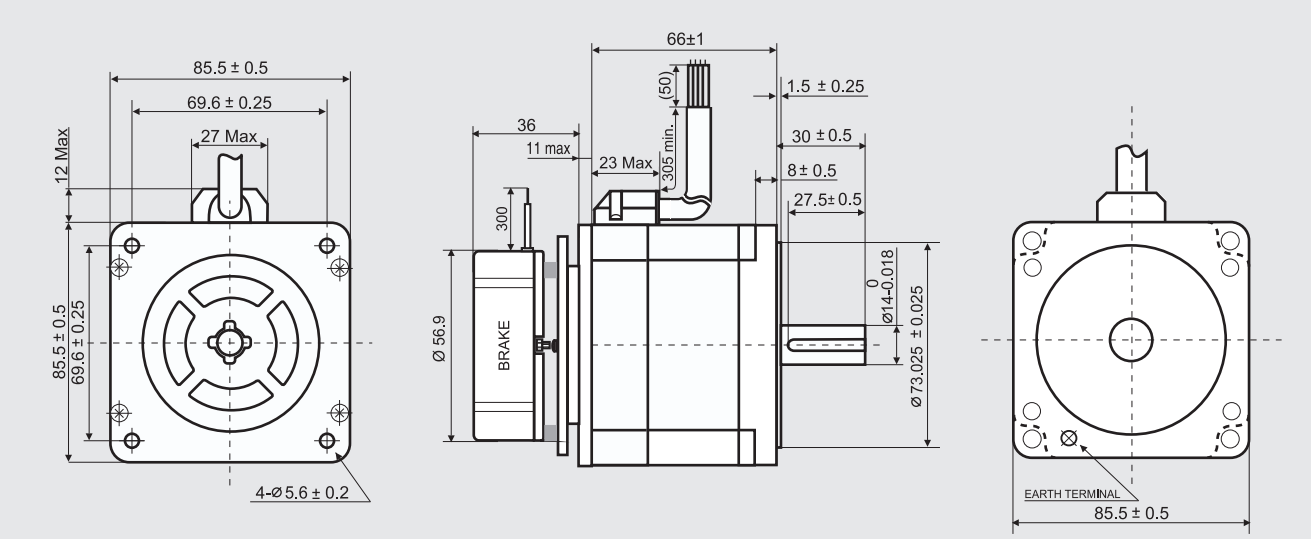

SANYO DENKI MOTOR FEATURES

MODEL		SM 2861-5025.B
SANYO DENKI MOTOR CODE		SM 2861-5025
BASIC STEP ANGLE		1.8° ± 0.09°
BIPOLAR PARALLEL CURRENT	(Amp)	2.0
RESISTANCE	(Ohm)	2.2
INDUCTANCE	(mH)	15
BIPOLAR HOLDING TORQUE	(Ncm)	360
ROTOR INERTIA	($Kgm^2 \times 10^{-7}$)	1480
THEORETICAL ACCELERATION	($rad \times sec.^{-2}$)	24300
BACK E.M.F.	(V/Krpm)	180
MASS	(Kg)	2.2
INTERNATIONAL STANDARDS		UL, CSA
INSULATION VOLTAGE	(V)	250 VAC (350 VDC)
PROTECTION DEGREE - INSULATION CLASS		IP43 - F
LEADS CODE		V

TORQUE/SPEED CURVE

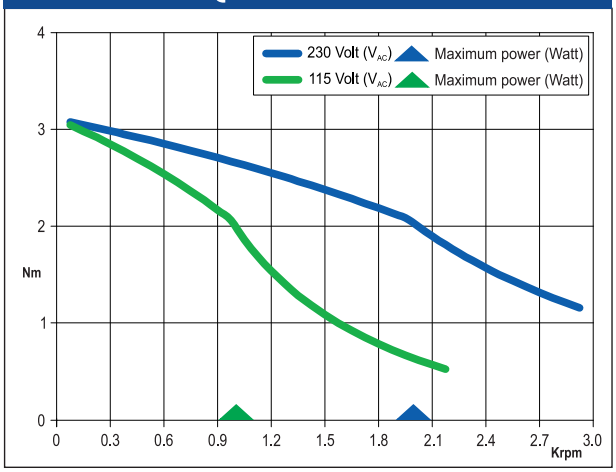

BRAKE FEATURES

STATIC TORQUE	(Nm)	3.3
DUTY CYCLE		50% max.
VOLTAGE	(Volt)	24 VDC
POWER	(W)	11
RELEASE TIME	(ms)	300

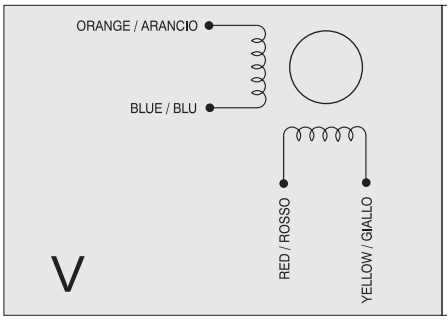

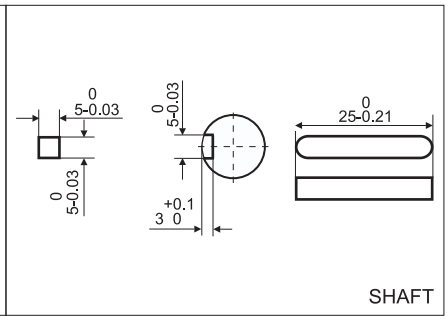

Suggested R.T.A. drive model: X-PLUS L2

SM 2861-5225.B

Dimensions (Unit:mm)

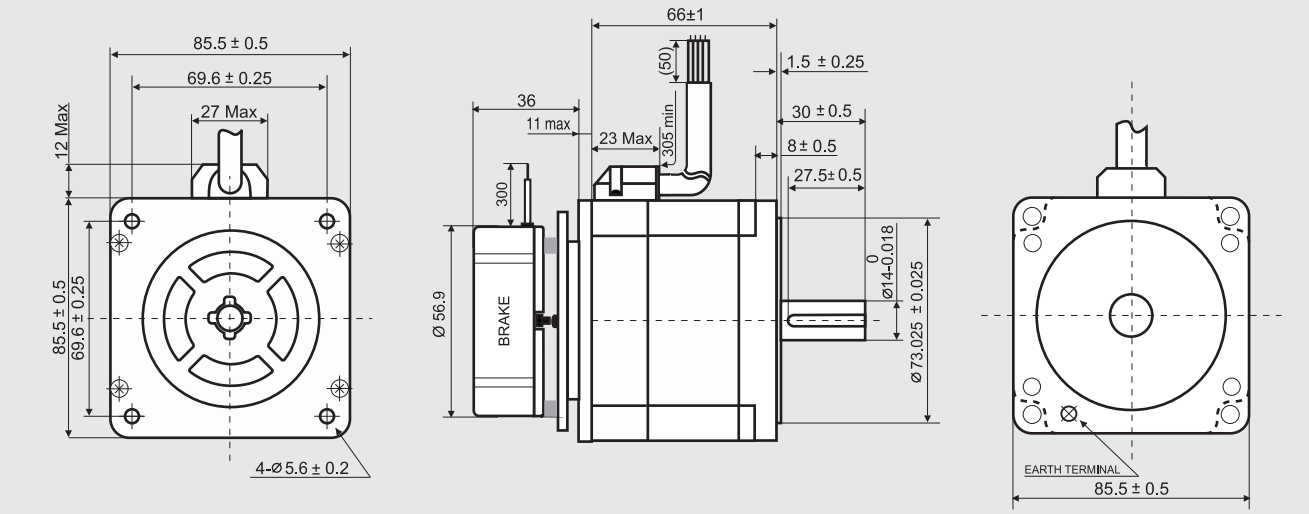

SANYO DENKI MOTOR FEATURES

MODEL		SM 2861-5225.B
SANYO DENKI MOTOR CODE		SM 2861-5225
BASIC STEP ANGLE		1.8° ± 0.09°
BIPOLAR PARALLEL CURRENT	(Amp)	6.0
RESISTANCE	(Ohm)	0.29
INDUCTANCE	(mH)	1.7
BIPOLAR HOLDING TORQUE	(Ncm)	360
ROTOR INERTIA	($Kgm^2 \times 10^{-7}$)	1480
THEORETICAL ACCELERATION	($rad \times sec.^{-2}$)	24300
BACK E.M.F.	(V/Krpm)	60
MASS	(Kg)	2.2
INTERNATIONAL STANDARDS		UL, CSA
INSULATION VOLTAGE	(V)	250 VAC (350 VDC)
PROTECTION DEGREE - INSULATION CLASS		IP43 - F
LEADS CODE		V

TORQUE/SPEED CURVE

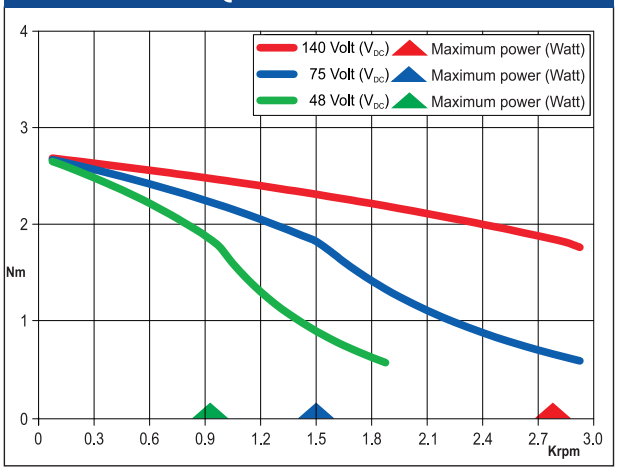

BRAKE FEATURES

STATIC TORQUE	(Nm)	3.3
DUTY CYCLE		50% max.
VOLTAGE	(Volt)	24 VDC
POWER	(W)	11
RELEASE TIME	(ms)	300

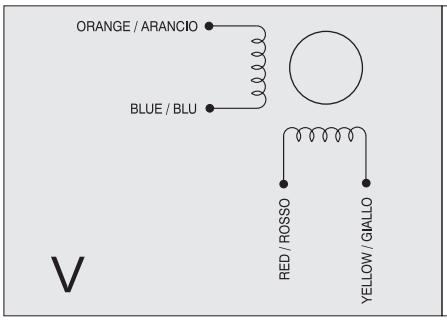

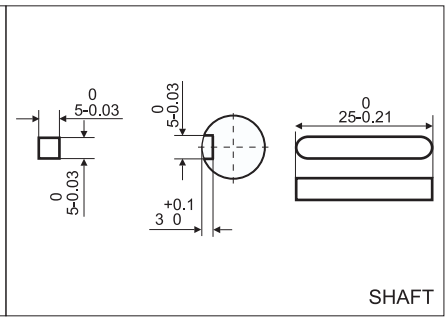

Suggested R.T.A. drive series: NDC, ADW, HGD, PLUS

SM 2862-5125.B

Dimensions (Unit:mm)

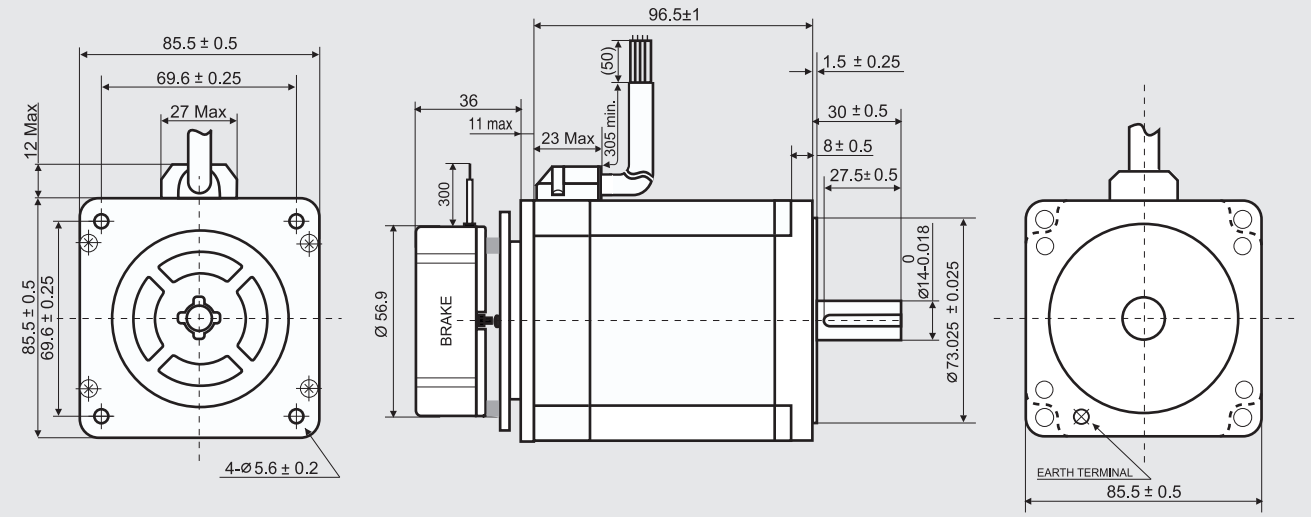

SANYO DENKI MOTOR FEATURES

MODEL		SM 2862-5125.B
SANYO DENKI MOTOR CODE		SM 2862-5125
BASIC STEP ANGLE		1.8° ± 0.09°
BIPOLAR PARALLEL CURRENT	(Amp)	4.0
RESISTANCE	(Ohm)	0.83
INDUCTANCE	(mH)	6.4
BIPOLAR HOLDING TORQUE	(Ncm)	700
ROTOR INERTIA	($Kgm^2 \times 10^{-7}$)	3000
THEORETICAL ACCELERATION	($rad \times sec.^{-2}$)	23300
BACK E.M.F.	(V/Krpm)	175
MASS	(Kg)	3.4
INTERNATIONAL STANDARDS		UL, CSA
INSULATION VOLTAGE	(V)	250 VAC (350 VDC)
PROTECTION DEGREE - INSULATION CLASS		IP43 - F
LEADS CODE		V

TORQUE/SPEED CURVE

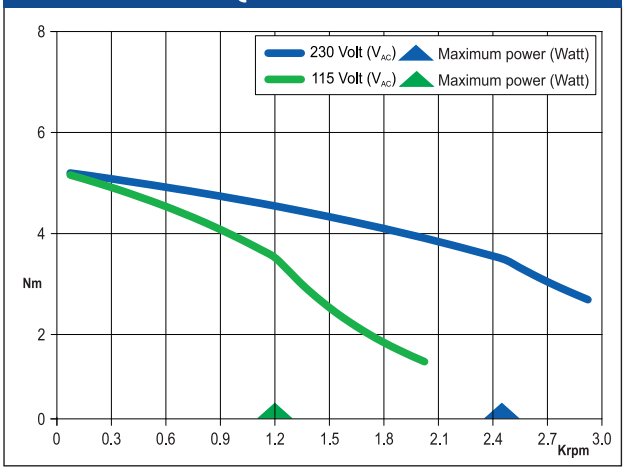

BRAKE FEATURES

STATIC TORQUE	(Nm)	3.3
DUTY CYCLE		50% max.
VOLTAGE	(Volt)	24 VDC
POWER	(W)	11
RELEASE TIME	(ms)	300

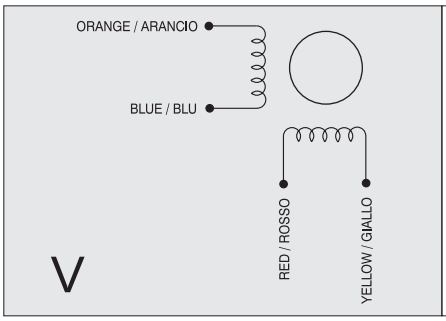

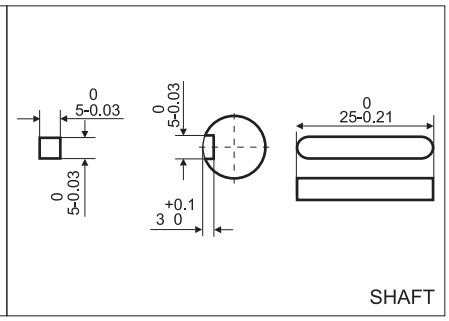

Suggested R.T.A. drive series: 230 Vac X-PLUS

SM 2862-5225.B

Dimensions (Unit:mm)

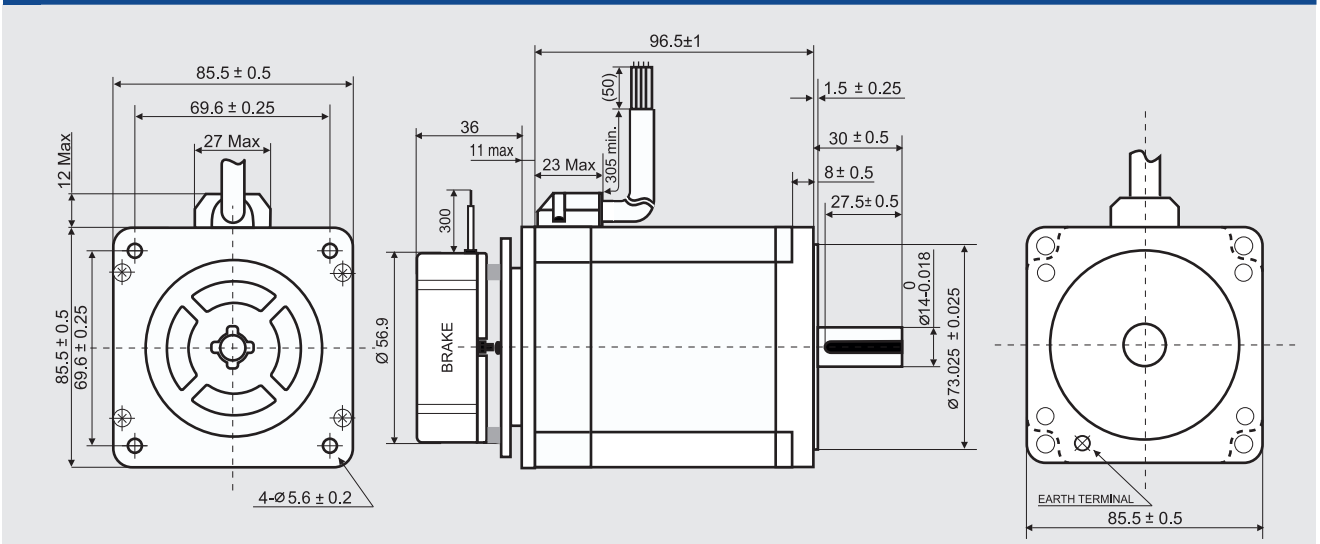

SANYO DENKI MOTOR FEATURES

MODEL		SM 2862-5225.B
SANYO DENKI MOTOR CODE		SM 2862-5225
BASIC STEP ANGLE		1.8° ± 0.09°
BIPOLAR PARALLEL CURRENT	(Amp)	6.0
RESISTANCE	(Ohm)	0.36
INDUCTANCE	(mH)	2.8
BIPOLAR HOLDING TORQUE	(Ncm)	700
ROTOR INERTIA	($Kgm^2 \times 10^{-7}$)	3000
THEORETICAL ACCELERATION	($rad \times sec.^{-2}$)	23300
BACK E.M.F.	(V/Krpm)	120
MASS	(Kg)	3.4
INTERNATIONAL STANDARDS		UL, CSA
INSULATION VOLTAGE	(V)	250 VAC (350 VDC)
PROTECTION DEGREE - INSULATION CLASS		IP43 - F
LEADS CODE		V

TORQUE/SPEED CURVE

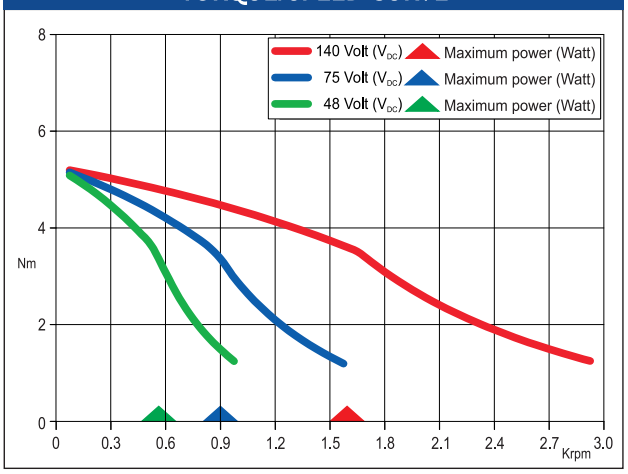

BRAKE FEATURES

STATIC TORQUE	(Nm)	3.3
DUTY CYCLE		50% max.
VOLTAGE	(Volt)	24 VDC
POWER	(W)	11
RELEASE TIME	(ms)	300

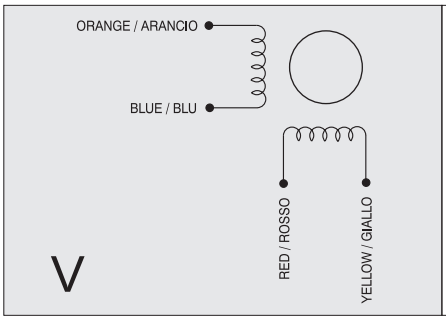

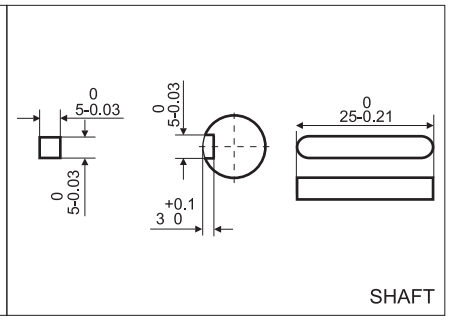

Suggested R.T.A. drive series: NDC, ADW, HGD, PLUS

CONNECTION SCHEMATICS OF DRIVES AND MOTORS

LEADS CODE	SERIES BIPOLAR CONNECTION	PARALLEL BIPOLAR CONNECTION
IV	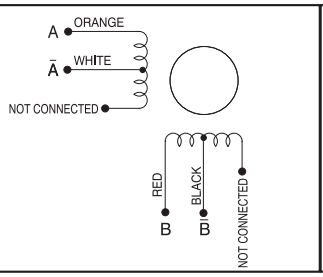	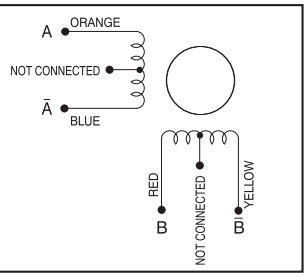
V	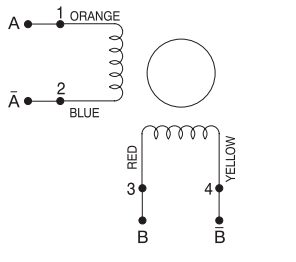	

INDUSTRIAL STEPPING MOTORS - CABLE OPTIONS		
RH SERIES	MOTOR CABLE	ENCODER CABLE
RH 1S0M	CVMRH1S02M/CVMRH1S0M3	N/A
RH 1S0M-RS	CVMRH1S02M/CVMRH1S0M3	N/A
RH 1S1M	CVMRH1S02M/CVMRH1S0M3	N/A
RH 1S1M-RS	CVMRH1S02M/CVMRH1S0M3	N/A
RH 1S2M	CVMRH1S02M/CVMRH1S0M3	N/A
RH 1S2M-RS	CVMRH1S02M/CVMRH1S0M3	N/A
RH 1S3M	CVMRH1S02M/CVMRH1S0M3	N/A
RH 1S3M-RS	CVMRH1S02M/CVMRH1S0M3	N/A
RM SERIES	MOTOR CABLE	ENCODER CABLE
RM 2R2M	CVMRMPM01M/CVMRMPM03M CVMRM90PM01M/CVMRM90PM03M	N/A
RM 3R1M	CVMRMPM01M/CVMRMPM03M CVMRM90PM01M/CVMRM90PM03M	N/A
RM 3R2M	CVMRMPM01M/CVMRMPM03M CVMRM90PM01M/CVMRM90PM03M	N/A
RM 3R3M	CVMRMPM01M/CVMRMPM03M CVMRM90PM01M/CVMRM90PM03M	N/A
SP SERIES (IP 65)	MOTOR CABLE	ENCODER CABLE
SP 2563-5000	CVMRMPM01M/CVMRMPM03M CVMRM90PM01M/CVMRM90PM03M	N/A
SP 2563-5200	CVMRMPM01M/CVMRMPM03M CVMRM90PM01M/CVMRM90PM03M	N/A
SP 2566-5200	CVMRMPM01M/CVMRMPM03M CVMRM90PM01M/CVMRM90PM03M	N/A
SP 2862-5100	CVMRMPM01M/CVMRMPM03M CVMRM90PM01M/CVMRM90PM03M	N/A
SP 2863-5100	CVMRMPM01M/CVMRMPM03M CVMRM90PM01M/CVMRM90PM03M	N/A

INDUSTRIAL STEPPING MOTORS - CABLE OPTIONS

SP SERIES (FULL IP 65)	MOTOR CABLE	ENCODER CABLE
SP 2566-50SX00	CVMRMPM01M/CVMRMPM03M CVMRM90PM01M/CVMRM90PM03M	N/A
SP 2566-52SX00	CVMRMPM01M/CVMRMPM03M CVMRM90PM01M/CVMRM90PM03M	N/A
SP2861-51SX01	CVMRMPM01M/CVMRMPM03M CVMRM90PM01M/CVMRM90PM03M	N/A
SP2862-51SX01	CVMRMPM01M/CVMRMPM03M CVMRM90PM01M/CVMRM90PM03M	N/A
SP2863-51SX01	CVMRMPM01M/CVMRMPM03M CVMRM90PM01M/CVMRM90PM03M	N/A

INDUSTRIAL STEPPING MOTORS WITH ENCODER - CABLE OPTIONS

	MOTOR CABLE	ENCODER CABLE
RH 1S0M-04D0	CVMRH1S02M/CVMRH1S0M3	CVEPA0D0M3/CVEPA0D02M
RH 1S0M-04E0	CVMRH1S02M/CVMRH1S0M3	CVEOZD0M3/CVEPAZD02M
RH 1S0M-0HE0	CVMRH1S02M/CVMRH1S0M3	CVEOZD0M3/CVEPAZD02M
RH 1S1M-04D0	CVMRH1S02M/CVMRH1S0M3	CVEPA0D0M3/CVEPA0D02M
RH 1S1M-04E0	CVMRH1S02M/CVMRH1S0M3	CVEOZD0M3/CVEPAZD02M
RH 1S1M-0HE0	CVMRH1S02M/CVMRH1S0M3	CVEOZD0M3/CVEPAZD02M
RH 1S2M-04D0	CVMRH1S02M/CVMRH1S0M3	CVEPA0D0M3/CVEPA0D02M
RH 1S2M-04E0	CVMRH1S02M/CVMRH1S0M3	CVEOZD0M3/CVEPAZD02M
RH 1S2M-0HE0	CVMRH1S02M/CVMRH1S0M3	CVEOZD0M3/CVEPAZD02M
RH 1S3M-04D0	CVMRH1S02M/CVMRH1S0M3	CVEPA0D0M3/CVEPA0D02M
RH 1S3M-04E0	CVMRH1S02M/CVMRH1S0M3	CVEOZD0M3/CVEPAZD02M
RH 1S3M-0HE0	CVMRH1S02M/CVMRH1S0M3	CVEOZD0M3/CVEPAZD02M
RM 3T1M-04D0	CVMRMPM01M/CVMRMPM03M CVMRM90PM01M/CVMRM90PM03M	CVERMPM01M/CVERMPM03M CVERM90PM01M/CVERM90PM03M
RM 3T1M-04E0	CVMRMPM01M/CVMRMPM03M CVMRM90PM01M/CVMRM90PM03M	CVERMPM01M/CVERMPM03M CVERM90PM01M/CVERM90PM03M
RM 3T1M-0HE0	CVMRMPM01M/CVMRMPM03M CVMRM90PM01M/CVMRM90PM03M	CVERMPM01M/CVERMPM03M CVERM90PM01M/CVERM90PM03M
RM 3T2M-04D0	CVMRMPM01M/CVMRMPM03M CVMRM90PM01M/CVMRM90PM03M	CVERMPM01M/CVERMPM03M CVERM90PM01M/CVERM90PM03M
RM 3T2M-04E0	CVMRMPM01M/CVMRMPM03M CVMRM90PM01M/CVMRM90PM03M	CVERMPM01M/CVERMPM03M CVERM90PM01M/CVERM90PM03M
RM 3T2M-0HE0	CVMRMPM01M/CVMRMPM03M CVMRM90PM01M/CVMRM90PM03M	CVERMPM01M/CVERMPM03M CVERM90PM01M/CVERM90PM03M
RM 3T3M-04D0	CVMRMPM01M/CVMRMPM03M CVMRM90PM01M/CVMRM90PM03M	CVERMPM01M/CVERMPM03M CVERM90PM01M/CVERM90PM03M
RM 3T3M-04E0	CVMRMPM01M/CVMRMPM03M CVMRM90PM01M/CVMRM90PM03M	CVERMPM01M/CVERMPM03M CVERM90PM01M/CVERM90PM03M
RM 3T3M-0HE0	CVMRMPM01M/CVMRMPM03M CVMRM90PM01M/CVMRM90PM03M	CVERMPM01M/CVERMPM03M CVERM90PM01M/CVERM90PM03M

TRADITIONAL STEPPING MOTORS - CABLE OPTIONS		
14 mm FLANGE	MOTOR CABLE	ENCODER CABLE
SH2141-5541	30 cm LEAD WIRE	N/A
28 mm FLANGE	MOTOR CABLE	ENCODER CABLE
SH2281-5271	30 cm LEAD WIRE	N/A
SH2281-5231	30 cm LEAD WIRE	N/A
SH2285-5271	30 cm LEAD WIRE	N/A
SH2285-5231	30 cm LEAD WIRE	N/A
42 mm FLANGE	MOTOR CABLE	ENCODER CABLE
103-H5205-5040	30 cm LEAD WIRE	N/A
103-H5205-0351	30 cm LEAD WIRE	N/A
103-H5205-0312	30 cm LEAD WIRE	N/A
103-H5205-4240	CVM103H5230	N/A
103-H5205-4210	CVM103H5230	N/A
103-H5208-0483	30 cm LEAD WIRE	N/A
103-H5210-4240	CVM103H5230	N/A
103-H5210-4210	CVM103H5230	N/A
103-H5210-4541	CVM103H5230	N/A
103-H5210-4512	30 cm LEAD WIRE	N/A
103-H5212-4640	CVM103H5230	N/A
103-H5212-4610	CVM103H5230	N/A
50 mm FLANGE	MOTOR CABLE	ENCODER CABLE
103-H6701-0140	30 cm LEAD WIRE	N/A
103-H6703-0440	30 cm LEAD WIRE	N/A
56 mm FLANGE	MOTOR CABLE	ENCODER CABLE
103-H7121-0440	30 cm LEAD WIRE	N/A
103-H7123-5040	30 cm LEAD WIRE	N/A
103-H7123-5010	30 cm LEAD WIRE	N/A
103-H7123-0140	30 cm LEAD WIRE	N/A
103-H7123-0440	30 cm LEAD WIRE	N/A
103-H7123-0740	30 cm LEAD WIRE	N/A
103-H7123-0710	30 cm LEAD WIRE	N/A
103-H7123-1749	30 cm LEAD WIRE	N/A
103-H7123-1711	30 cm LEAD WIRE	N/A
103-H7126-0140	30 cm LEAD WIRE	N/A
103-H7126-0740	30 cm LEAD WIRE	N/A
103-H7126-0710	30 cm LEAD WIRE	N/A
103-H7126-1740	30 cm LEAD WIRE	N/A
103-H7126-1710	30 cm LEAD WIRE	N/A
103-H7126-6640	30 cm LEAD WIRE	N/A
103-H7126-6610	30 cm LEAD WIRE	N/A
103-H7128-5740	30 cm LEAD WIRE	N/A
103-H7128-5710	30 cm LEAD WIRE	N/A
60 mm FLANGE	MOTOR CABLE	ENCODER CABLE
103-H7822-0740	CVM77100 + CVM77300	N/A
103-H7823-0740	CVM77100 + CVM77300	N/A
103-H7823-1740	CVM78100 + CVM78300	N/A
103-H7823-1714	CVM78100 + CVM78300	N/A
103-H7826-1642	CVM78100 + CVM78300	N/A
103-H7826-1612	CVM78100 + CVM78300	N/A

TRADITIONAL STEPPING MOTORS - CABLE OPTIONS

85.5 mm FLANGE	MOTOR CABLE	ENCODER CABLE
SM 2861-5055	30 cm LEAD WIRE	N/A
SM 2861-5025	30 cm LEAD WIRE	N/A
SM 2861-5255	30 cm LEAD WIRE	N/A
SM 2861-5225	30 cm LEAD WIRE	N/A
SM 2862-5055	30 cm LEAD WIRE	N/A
SM 2862-5155	30 cm LEAD WIRE	N/A
SM 2862-5125	30 cm LEAD WIRE	N/A
SM 2862-5255	30 cm LEAD WIRE	N/A
SM 2862-5225	30 cm LEAD WIRE	N/A
SM 2863-5155	30 cm LEAD WIRE	N/A
SM 2863-5126	30 cm LEAD WIRE	N/A
SM 2863-5255	30 cm LEAD WIRE	N/A
SM 2863-5225	30 cm LEAD WIRE	N/A
106.4 mm FLANGE	MOTOR CABLE	ENCODER CABLE
103-H89222-6341	30 cm LEAD WIRE	N/A
103-H89222-6311	30 cm LEAD WIRE	N/A
103-H89222-6541	30 cm LEAD WIRE	N/A
103-H89223-6341	30 cm LEAD WIRE	N/A
103-H89223-6311	30 cm LEAD WIRE	N/A
103-H89223-6641	30 cm LEAD WIRE	N/A
103-H89223-6611	30 cm LEAD WIRE	N/A

NOT PREFERRED:		
103-H8221-6241	30 cm LEAD WIRE	N/A
103-H8221-6211	30 cm LEAD WIRE	N/A
103-H8222-6340	30 cm LEAD WIRE	N/A
103-H8222-6310	30 cm LEAD WIRE	N/A
103-H8223-6540	30 cm LEAD WIRE	N/A
103-H8223-6510	30 cm LEAD WIRE	N/A

TRADITIONAL STEPPING MOTORS WITH ENCODER - CABLE OPTIONS

	MOTOR CABLE	ENCODER CABLE
EM 0H1M-04D0	30 cm LEAD WIRE	CVEPB0D0M4/CVEPB0D01M
EM 0H2M-04D0	30 cm LEAD WIRE	CVEPB0D0M4/CVEPB0D01M
EM 1H2H-04D0	CVM103H5230/CVM103H5200	CVEPA0D03M/CVEPAZD0M3
EM 1H2H-04E0	CVM103H5230/CVM103H5200	CVEPA0D03M/CVEPAZD0M3
EM 1H2H-0HE0	CVM103H5230/CVM103H5200	CVEPA0D03M/CVEPAZD0M3
EM 1H3H-04D0	CVM103H5230/CVM103H5200	CVEPA0D03M/CVEPAZD0M3
EM 1H3H-04E0	CVM103H5230/CVM103H5200	CVEPA0D03M/CVEPAZD0M3
EM 1H3H-0HE0	CVM103H5230/CVM103H5200	CVEPA0D03M/CVEPAZD0M3
EM 2H1M-04D0	30 cm LEAD WIRE	CVEPA0D03M/CVEPAZD0M3
EM 2H1M-04E0	30 cm LEAD WIRE	CVEPA0D03M/CVEPAZD0M3
EM 2H1M-0HE0	30 cm LEAD WIRE	CVEPA0D03M/CVEPAZD0M3
EM 2H2M-04D0	30 cm LEAD WIRE	CVEPA0D03M/CVEPAZD0M3
EM 2H2M-04E0	30 cm LEAD WIRE	CVEPA0D03M/CVEPAZD0M3
EM 2H2M-0HE0	30 cm LEAD WIRE	CVEPA0D03M/CVEPAZD0M3
EM 6H2M-04D0	CVM78100/CVM78300	CVEPA0D03M/CVEPAZD0M3
EM 6H2M-04E0	CVM78100/CVM78300	CVEPA0D03M/CVEPAZD0M3
EM 6H2M-0HE0	CVM78100/CVM78300	CVEPA0D03M/CVEPAZD0M3
EM 6H3H-04D0	CVM78100/CVM78300	CVEPA0D03M/CVEPAZD0M3
EM 6H3H-04E0	CVM78100/CVM78300	CVEPA0D03M/CVEPAZD0M3
EM 6H3H-0HE0	CVM78100/CVM78300	CVEPA0D03M/CVEPAZD0M3
EM 3F1L-04D0	30 cm LEAD WIRE	40 cm LEAD WIRE
EM 3F1H-04D0	30 cm LEAD WIRE	40 cm LEAD WIRE
EM 3F1H-04E0	30 cm LEAD WIRE	40 cm LEAD WIRE
EM 3F1H-0HE0	30 cm LEAD WIRE	40 cm LEAD WIRE
EM 3F2M-04D0	30 cm LEAD WIRE	40 cm LEAD WIRE
EM 3F2H-04D0	30 cm LEAD WIRE	40 cm LEAD WIRE
EM 3F2H-04E0	30 cm LEAD WIRE	40 cm LEAD WIRE
EM 3F2H-0HE0	30 cm LEAD WIRE	40 cm LEAD WIRE
EM 3F3H-04D0	30 cm LEAD WIRE	40 cm LEAD WIRE
EM 3F3H-04E0	30 cm LEAD WIRE	40 cm LEAD WIRE
EM 3F3H-0HE0	30 cm LEAD WIRE	40 cm LEAD WIRE
EM 3F3M-14D0	100 cm LEAD WIRE	80 cm LEAD WIRE

TRADITIONAL STEPPING MOTORS WITH BRAKE - CABLE OPTIONS

	MOTOR CABLE	ENCODER CABLE
103-H5210-4512.B	CVM103H5230/CVM103H5200	/
103-H7123-5010.B	30 cm LEAD WIRE	/
103-H7123-0710.B	30 cm LEAD WIRE	/
103-H7123-1711.B	30 cm LEAD WIRE	/
103-H7126-0710.B	30 cm LEAD WIRE	/
103-H7126-1710.B	30 cm LEAD WIRE	/
103-H7823-1714.B	CVM78100/CVM78300	/
103-H7826-1612.B	CVM78100/CVM78300	/
SM 2861-5025.B	30 cm LEAD WIRE	/
SM 2861-5225.B	30 cm LEAD WIRE	/
SM 2862-5125.B	30 cm LEAD WIRE	/
SM 2862-5225.B	30 cm LEAD WIRE	/

STEPPING MOTORS

ACCESSORIES FRONT BRAKES

FB-M12-17-02-00000

FRONT BRAKES

M12 CONNECTOR

24 VDC

NEMA 17

SCAN THE QR CODE TO WATCH A VIDEO ON FB SERIES FRONT BRAKES

Dimensions (Units:mm)

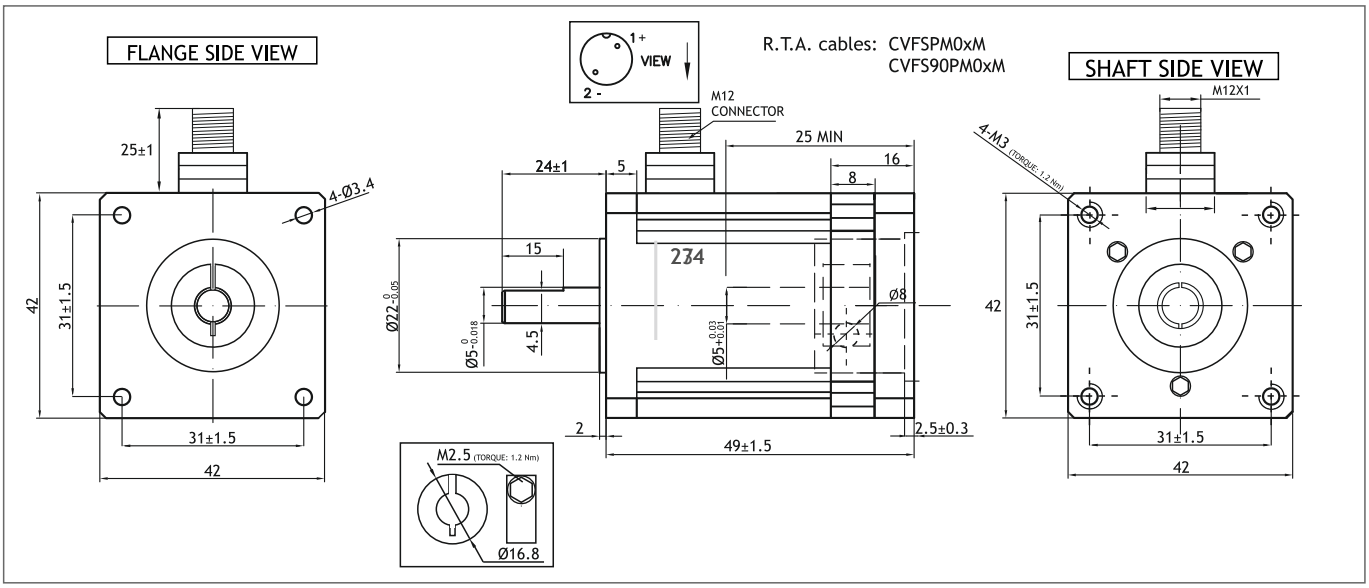

MODEL	Static torque (Nm)	Current (mA)	Voltage (V)	Power (W)	Mass (Kg)
FB-M12-17-02-00000	0.2	170	24 VDC	4.1	0.27

Suggested motors and cables

MOUNTING OPERATION MODE: ■ Tightening torque M= 1.2 Nm ■ Locking bolt M5 ■ R.T.A. Quality Control

CAUTION **Use for safety related functions is forbidden (EN 60204-1). Moreover, when the application arrangement is in such way that a brake fault or failure could generate a risk for property or human life, external independent safety protection system must be provided in the machine.**

FB-M12-23-08-00000

FRONT BRAKES

M12 CONNECTOR

24 VDC

NEMA 23

SCAN THE QR CODE TO WATCH A VIDEO ON FB SERIES FRONT BRAKES

Dimensions (Units:mm)

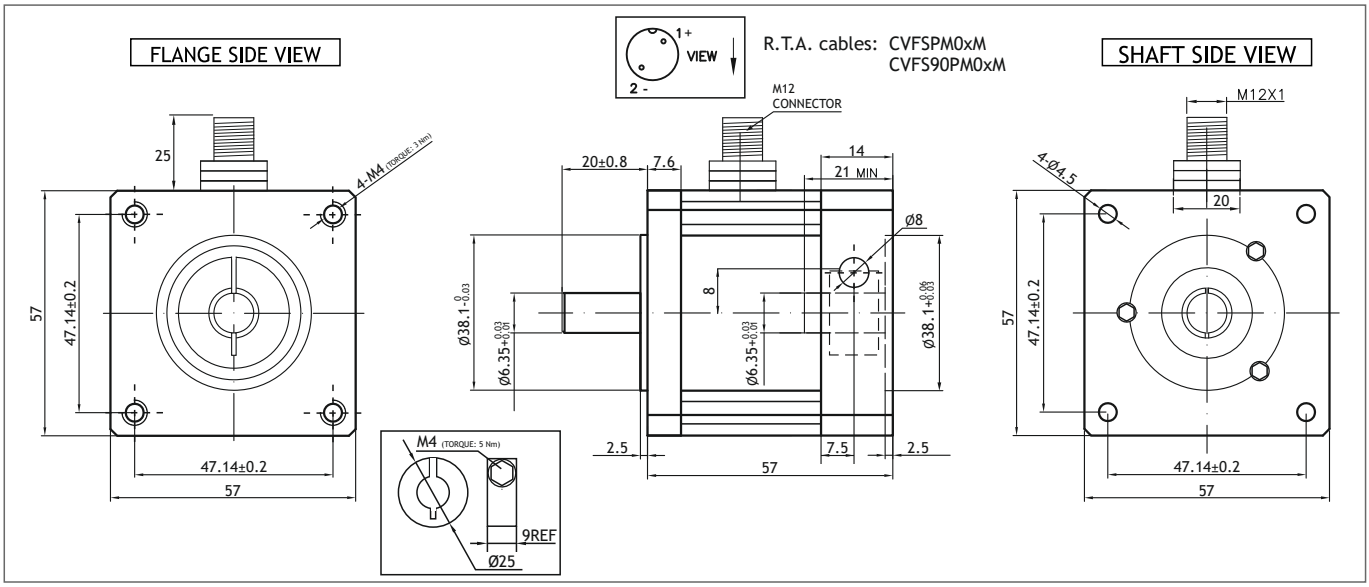

MODEL	Static torque (Nm)	Current (mA)	Voltage (V)	Power (W)	Mass (Kg)
FB-M12-23-08-00000	0.8	340	24 VDC	8.1	0.63

Suggested motors and cables

MOUNTING OPERATION MODE: ■ Tightening torque M= 5 Nm ■ Locking bolt M4 ■ R.T.A. Quality Control

CAUTION

Use for safety related functions is forbidden (EN 60204-1). Moreover, when the application arrangement is in such way that a brake fault or failure could generate a risk for property or human life, external independent safety protection system must be provided in the machine.

FB-M12-24-15-00000

FRONT BRAKES

M12 CONNECTOR

24 VDC

NEMA 24

SCAN THE QR CODE TO WATCH A VIDEO ON FB SERIES FRONT BRAKES

Dimensions (Units:mm)

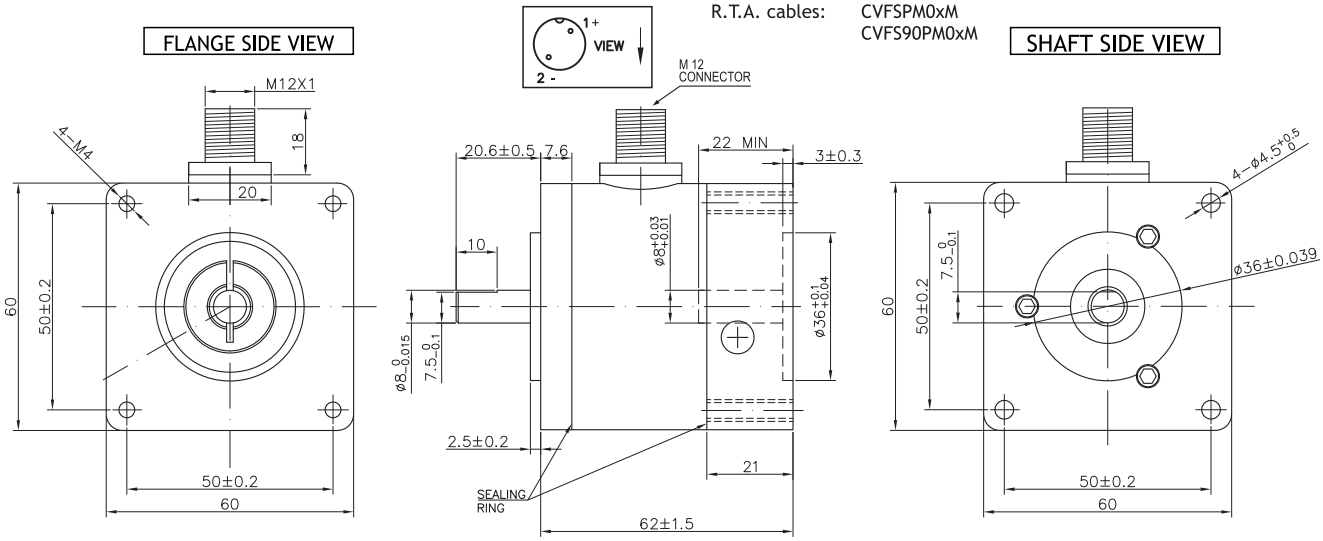

MODEL	Static torque (Nm)	Current (mA)	Voltage (V)	Power (W)	Release time (ms)	Mass (Kg)
FB-M12-24-15-00000	1.5	460	24 VDC	11.0	100	0.57

Suggested motors and cables

MOUNTING OPERATION MODE: ■ Tightening torque M=3.4 Nm ■ Locking bolt M4 ■ R.T.A. Quality Control

FB-M12-34-35-00000

FRONT BRAKES

M12 CONNECTOR

24 VDC

NEMA 34

SCAN THE QR CODE TO WATCH A VIDEO ON FB SERIES FRONT BRAKES

Dimensions (Units:mm)

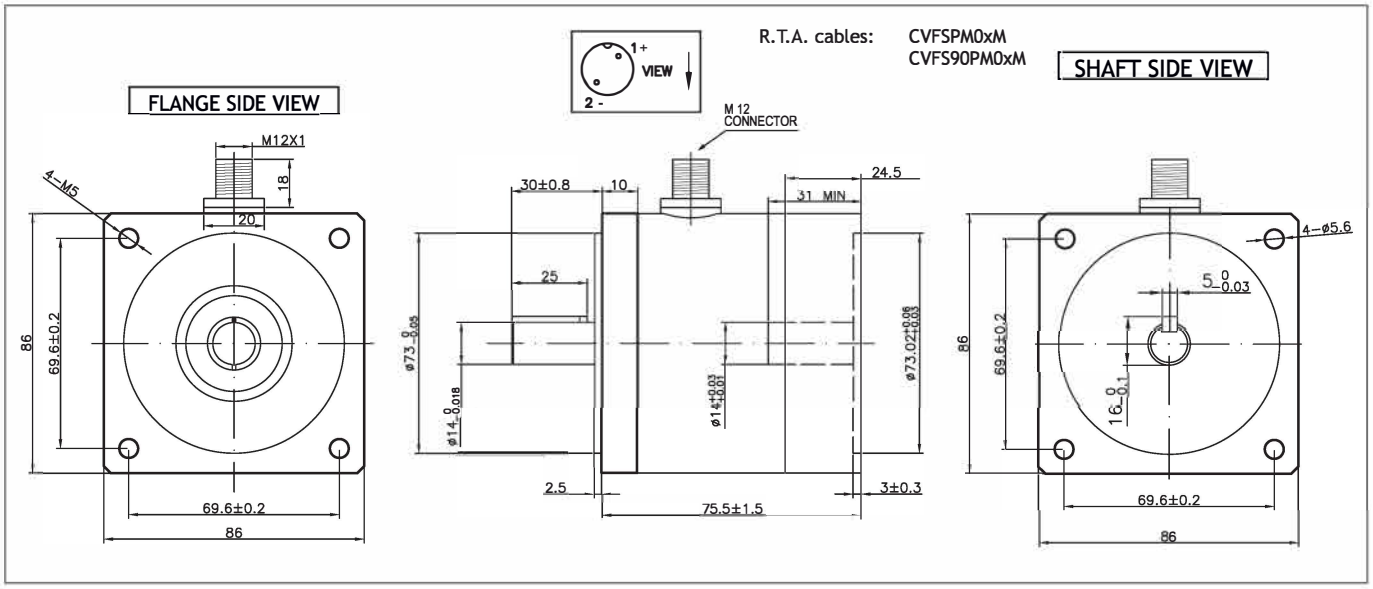

MODEL	Static torque (Nm)	Current (mA)	Voltage (V)	Power (W)	Mass (Kg)
FB-M12-34-35-00000	3.5	460	24 VDC	11.0	1.61

Suggested motors and cables

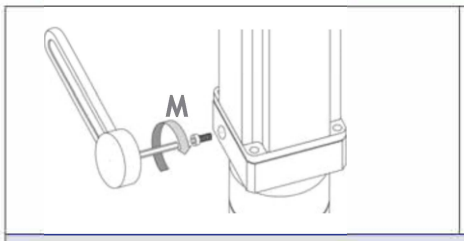

NEMA 34 motors

R.T.A. cables

CVFSPM0xM x=1m/3m

CVFS90PM0xM x=1m/3m

MOUNTING OPERATION MODE: ■ Tightening torque M= 8 Nm ■ Locking bolt M5 ■ R.T.A. Quality Control

ACCESSORIES - FRONT BRAKES - CABLE OPTIONS

	BRAKE CABLE
FB-M12-34-35-00000	CVFSPM01M/CVFSPM03M CVFS90PM01M/CVFS90PM03M
FB-M12-24-15-0000	CVFSPM01M/CVFSPM03M CVFS90PM01M/CVFS90PM03M

ITALY

Corporate Headquarters

R.T.A.srl
Via E. Mattei 15, Fraz. Divisa - 27020 Marcignago (PV) ITALY
T +39.0382.929.855 | F +39.0382.929.150 | info@rta.it

www.rta.it

Local Branches

R.T.A. Filiale Centro
Centro Direzionale Cavour
Via Cavour 2, 40055 Villanova di Castenaso (BO) ITALY
T +39.051.780141 | rtabo@rta.it

R.T.A. Filiale Nord-Est
Via D. Alighieri 4, 30034 Mira (VE) ITALY
T +39.041.5600332 | F +39.041.5600165 | rtane@rta.it

GERMANY

R.T.A. Deutschland GmbH
Bublitzer Strasse 34, 40599 Düsseldorf GERMANY
T +49.211.749.668.60 | F +49.211.749.668.66 | info@rta-deutschland.de

www.rta-deutschland.de

INDIA

R.T.A. India Pvt
Teerth Business Center
3rd Floor, Unit No. 7, Block EL - 15, MIDC Bhosari
Pimpri-Chinchwad, Pune 411026 INDIA
T +91 942.250.744.5 | rtain@rta-india.in

www.rta-india.in

CATALOGUE
DIGITAL EDITION

Look Ahead!

CG_EN_OCT25