SERVO SYSTEMS

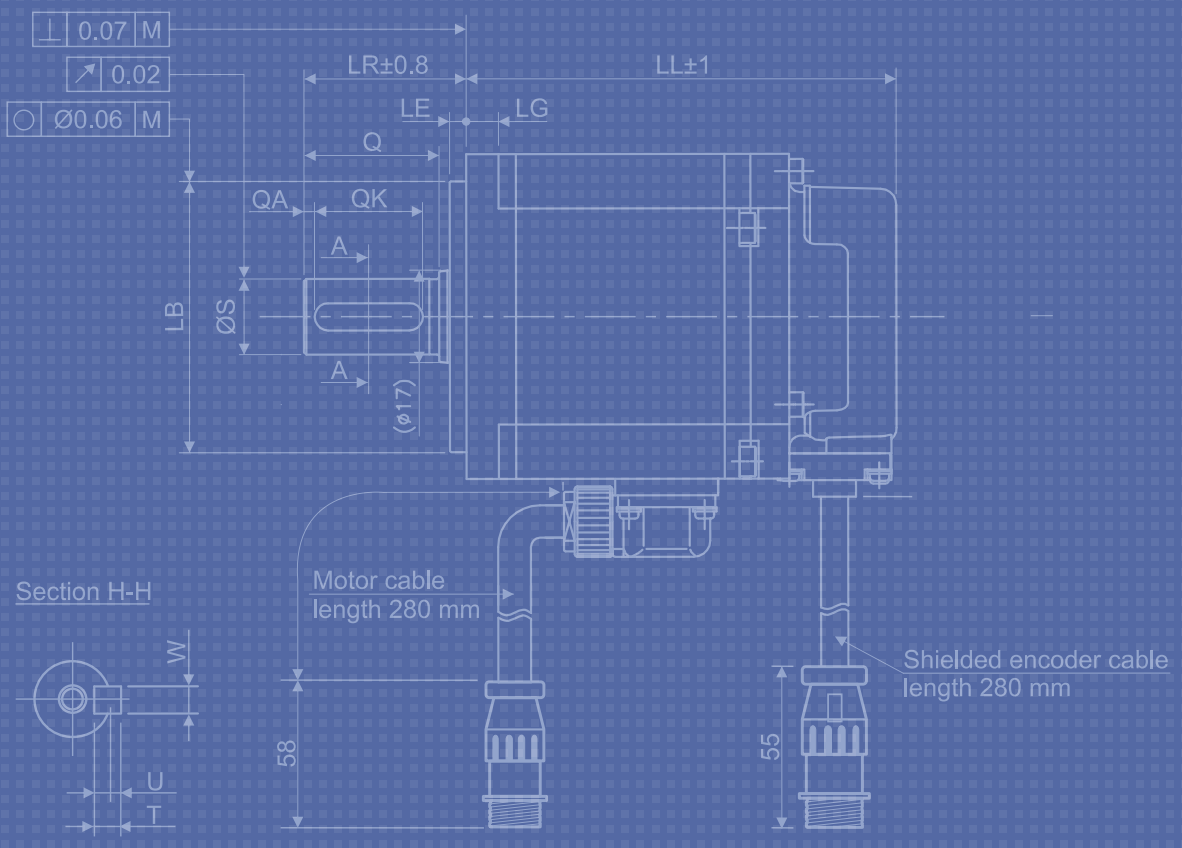
0.07 M
0.02
Ø0.06 M
LR±0.8
LL±1
LE
LG
Q
QA
QK
A
A
LB
ØS
(ø17)
Motor cable
length 280 mm
Shielded encoder cable
length 280 mm
Section H-H
W
U
T
58
55

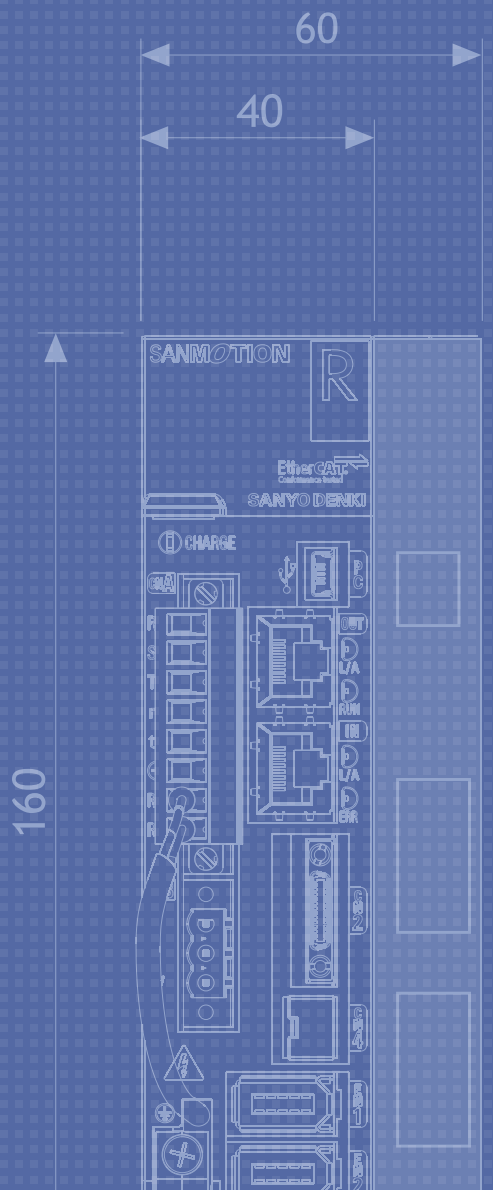
60
40
160
SANMOTION
R
EtherCAT
SANYO DENKI
CHARGE

SERVO SYSTEMS

INDEX

48 VDC SERVOAMPLIFIERS	295
230 VAC SERVOAMPLIFIERS	303
400 VAC SERVOAMPLIFIERS	317
48 VDC SERVOMOTORS - INCREMENTAL ENCODER	322
230 VAC SERVOMOTORS - BATTERY LESS MULTI-TURN ABSOLUTE ENCODER	327
230 VAC SERVOMOTORS - INCREMENTAL ENCODER	345
400 VAC SERVOMOTORS - BATTERY LESS MULTI-TURN ABSOLUTE ENCODER	356
400 VAC SERVOMOTORS - INCREMENTAL ENCODER	360

Servoamplifiers: 3 series, 17 models

3rd GENERATION SERVOAMPLIFIERS

1 48 VDC SERVOAMPLIFIERS

EtherCAT - single axis

- 48 VDC main power supply
- 24 VDC control power supply
- Amplifier Capacity: 40 A
- Speed Frequency response 800 Hz
- Built-in Dynamic Brake
- Built-in Regenerative Resistor
- Safe Torque Off (STO) - SIL 2 PL=d
- Two encoder inputs
- 6 Inputs / 2 Outputs
- Seven segments display monitor
- Protection functions

EtherCAT - multi axes

- 48 VDC main power supply
- 24 VDC control power supply
- Amplifier Capacity: 40 A
- Speed Frequency response 800 Hz
- Optional External Regenerative Resistor
- Safe Torque Off (STO) - SIL 3 PL=e
- 8 Inputs / 8 Outputs
- Led display monitor
- Protection functions

Pulse Train

- 48 VDC main power supply
- 5 VDC control power supply
- Amplifier Capacity: 40 A
- Speed Frequency response 1,2 KHz
- Built-in Dynamic Brake
- 8 Inputs / 8 Outputs
- Led display monitor
- Protection functions

EtherCAT 48 VDC PULSE TRAIN ADVANCED MODEL SIL3 SAFE TORQUE OFF (STO) c UL us

2 230 VAC SERVOAMPLIFIERS

EtherCAT

- 230 VAC power supply
- Amplifier capacity: 30 A, 50 A, 100 A
- Speed Frequency response 2,2 KHz
- Built-in Dynamic Brake
- Built-in Regenerative Resistor
- Safe Torque Off (STO) - SIL 3 PL=e
- Advanced Safety Functions available: STO, SS1, SS2, SLS, SOS, SBC, SSM
- Two encoder inputs
- 7 Inputs / 2 Outputs

Pulse Train - Analog Input

- 230 VAC power supply
- Amplifier capacity: 20 A, 30 A, 50 A, 100 A
- Speed Frequency response 2,2 KHz
- Built-in Dynamic Brake
- Optional External Regenerative Resistor
- Safe Torque Off (STO) - SIL 3 PL=e
- 8 Inputs / 8 Outputs

EtherCAT 230 VAC PULSE TRAIN ANALOG INPUT BATTERY-LESS SIL3 SAFE TORQUE OFF (STO) c UL us

3 400 VAC SERVOAMPLIFIERS

EtherCAT

- 400 VAC power supply
- Amplifier capacity: 50 A, 100 A
- Speed Frequency response 2,2 KHz
- Safe Torque Off (STO) - SIL 3
- Two encoder inputs

Pulse Train - Analog Input

- 400 VAC power supply
- Amplifier capacity: 50 A, 100 A, 150 A
- Speed Frequency response 2,2 KHz
- Safe Torque Off (STO) - SIL 3

EtherCAT® 400 VAC PULSE TRAIN ANALOG INPUT SIL 3 SAFE TORQUE OFF (STO) c UL us

Main features

- Simultaneous access to all parameters through the "Group/Page" Interface.
- Intuitive graphic interface for I/O settings.
- Advanced jogging for mechanics testing.
- Real-time autotuning function.
- Efficient warnings control system for real-time diagnosis.
- Embedded oscilloscope for results checking.
- STO function available.

Table of contents

SERVOAMPLIFIERS

	DRIVE TYPE	MAIN POWER SUPPLY VOLTAGE (V)	STO (Safe Torque Off)	DIMENSIONS (mm)	PAGE
48 VDC SERVOAMPLIFIERS					
EtherCAT					
RS2K04A2HL5	EtherCAT	48 VDC	YES	40x160x85	296
RF2K24A0HL5	EtherCAT	48 VDC	YES	50x200x130	298
Step/Dir					
RF2G21A0AA0	Step/Dir analog	48 VDC	NO	30x116x70	300
230 VAC SERVOAMPLIFIERS					
EtherCAT					
RS3A03A2HA4W00P	EtherCAT	230 VAC	YES	50 x 160 x 130	304
RS3A05A2HA4W00P	EtherCAT	230 VAC	YES	85x160x130	304
RS3A10A2HA4W00P	EtherCAT	230 VAC	YES	100x235x220	304
RS3AxxA2HAE (ADVANCED SAFETY)	EtherCAT	230 VAC	ADVANCED FUNCTIONS	60x160x130	306
GADSA03AH24 NEW!	EtherCAT	230 VAC	YES	50 x 160 x 130	308
GADWA33AH14 NEW!	EtherCAT	230 VAC	YES	75 x 160 x 195	310
Step/Dir - Analog Input					
RS3A03A0AL0W00P	Step/Dir analog	230 VAC	NO	50x160x130	312
RS3A03A0AL2 (STO)	Step/Dir analog	230 VAC	YES	50x160x130	314
RS3A05A0AA2 (STO)	Step/Dir analog	230 VAC	YES	85x160x130	314
RS3A10A0AA2 (STO)	Step/Dir analog	230 VAC	YES	100x235x220	314
400 VAC SERVOAMPLIFIERS					
EtherCAT					
RS3C05A2HA4	EtherCAT	400 VAC	YES	100x235x235	318
RS3C10A2HA4	EtherCAT	400 VAC	YES	175x235x235	318
RS3C15A2HL4	EtherCAT	400 VAC	YES	220x375x217	318
Step/Dir - Analog Input					
RS3C05A0AA2	Step/Dir analog	400 VAC	YES	100x235x235	320
RS3C10A0AA2	Step/Dir analog	400 VAC	YES	175x235x235	320
RS3C15A0AL2	Step/Dir analog	400 VAC	YES	220x375x217	320

2 Families: VDC servomotors and VAC servomotors, 4 series with +40 models

1 48 VDC SERVOMOTORS - INCREMENTAL ENCODER

- Nominal Power: 50W, 100W, 200W
- Nominal Torque: From 0,159 Nm to 0,637 Nm
- Maximum torque: From 0,54 Nm to 1,5 Nm
- Encoder resolution: 131072 imp/rev (17 bit)

48 VDC | IP 67 | ULTRA COMPACT SIZE | c UL us

2 230 VAC SERVOMOTORS - BATTERY LESS MULTI-TURN ABSOLUTE ENCODER

- Nominal Power: 100W, 200W, 400W, 750W, 1000W, 3000W
- Nominal Torque: From 0,286 Nm to 7,2 Nm
- Maximum torque: From 1,18 Nm to 20,5 Nm
- Single-turn Encoder resolution: 131072 imp/rev (17 bit)
- Multi-turn Encoder resolution: 65537 turns

230 VAC | BATTERY-LESS ABSOLUTE ENCODER | IP 67 | ULTRA COMPACT SIZE | c UL us

3 230 VAC SERVOMOTORS - INCREMENTAL ENCODER

- Nominal Power: 100W, 200W, 400W, 750W, 1000W, 1500W, 1800W, 2000W, 3000W
- Nominal Torque: From 0,318 Nm to 9,7 Nm
- Maximum torque: From 1,18 Nm to 21,4 Nm
- Encoder resolution: 131072 imp/rev (17 bit)

230 VAC | IP 67 | ULTRA COMPACT SIZE | c UL us

4 400 VAC SERVOMOTORS - BATTERY LESS MULTI-TURN ABSOLUTE ENCODER

- Nominal Power: 3500W, 4500W, 15000W
- Nominal Torque: From 1700 Ncm to 9500 Ncm
- Maximum torque: From 4900 Ncm to 14000 Ncm
- Single-turn Encoder resolution: 131072 imp/rev (17 bit)
- Multi-turn Encoder resolution: 65536 turns (16 bit)

400 VAC | BATTERY-LESS ABSOLUTE ENCODER | IP 67 | ULTRA COMPACT SIZE | c UL us

5 400 VAC SERVOMOTORS - INCREMENTAL ENCODER

- Nominal Power: 3500W, 4500W, 15000W
- Nominal Torque: From 1700 Ncm to 9500 Ncm
- Maximum torque: From 4900 Ncm to 21500 Ncm
- Encoder resolution: 131072 imp/rev (17 bit)

400 VAC | IP 67 | ULTRA COMPACT SIZE | c UL us

Table of contents

SERVOMOTORS

	NOMINAL POWER (W)	NOMINAL SPEED (rpm)	MAX SPEED (rpm)	NOMINAL TORQUE (Nm)	STALL TORQUE (Nm)	MAX TORQUE (Nm)	INERTIA (Kg x m²)	FLANGE SIZE (mm)	PAGE
DC SERVOMOTORS									
48 VDC Servomotors Incremental Encoder									
R2GD04005FXH1CM	50	3000	6000	0.159	0.167	0.54	$0.0376X10^{-4}$	40	323
R2GD06010DXH11M	100	3000	5000	0.318	0.353	0.84	$0.117x10^{-4}$	60	324
R2GD06020DXH11M	200	3000	4500	0.637	0.637	1.5	$0.219x10^{-4}$	60	325
AC SERVOMOTORS									
230 Vac Servomotors Battery Less Multi-turn Absolute Encoder									
R2AA04010FXR1CM	100	3000	6000	0.286	0.318	1.18	$0.0627x10^{-4}$	40	328
R2AA04010FCR1CM6	100	3000	6000	0.286	0.318	1.18	$0.0627x10^{-4}$	40	328
GAM2A4010F0XRK2 NEW!	100	3000	6500	0.318	0.318	1.18	$0.0600x10^{-4}$	40	329
R2AA06020FXR11M	200	3000	6000	0.637	0.686	2.20	$0.219x10^{-4}$	60	330
R2AA06020FCR11M	200	3000	6000	0.637	0.686	2.20	$0.219x10^{-4}$	60	330
GAM2A6020F0XRK2 NEW!	200	3000	6500	0.637	0.686	2.20	$0.247x10^{-4}$	60	331
R2AA06040FXR11M	400	3000	6000	1.270	1.370	4.80	$0.412x10^{-4}$	60	332
R2AA06040FCR11M6	400	3000	6000	1.270	1.370	4.80	$0.412x10^{-4}$	60	332
GAM2A6040F0XRK2 NEW!	400	3000	6500	1.270	1.370	4.80	$0.460x10^{-4}$	60	333
R2AA08075FXR11M	750	3000	6000	2.390	2.550	8.50	$1.820x10^{-4}$	80	334
R2AA08075FCR11M	750	3000	6000	2.390	2.550	8.50	$1.820x10^{-4}$	80	334
GAM2A8075V0XRK2 NEW!	750	3000	6500	2.390	2.550	8.50	$1.560x10^{-4}$	80	335
R2AAB8100HXR29M	1000	3000	3000	3.180	3.920	11.60	$2.383x10^{-4}$	86	336
R2AAB8100HCR29M	1000	3000	3000	3.180	3.920	11.60	$2.383x10^{-4}$	86	336
GAM2A9100H0XRK2 NEW!	1000	3000	3000	3.180	3.920	11.60	$2.450x10^{-4}$	86	337
Q2AA10150BXR48M	1500	2000	2000	7.2	7.7	20.5	$8.0x10^{-4}$	100	338
Q2AA10150BCR48M	1500	2000	2000	7.2	7.7	20.5	$8.0x10^{-4}$	100	338
GAM2AA150B0XNB3 NEW!	1500	2000	2000	7.2	7.7	20.5	$6.10x10^{-4}$	100	339
GAM2AA150B0XRB3 NEW!	1500	2000	2000	7.2	7.7	20.5	$6.10x10^{-4}$	100	340
GAM1AA150F0XRB3 NEW!	1500	3000	6000	4.8	4.9	15.0	$1.98x10^{-4}$	100	341
R2AA13200LXR00M	2000	2000	3000	9.5	12	24	$12.2x10^{-4}$	100	342
R1AA13300FXR00M	3000	3000	6000	9.7	9.7	29	$7x10^{-4}$	130	343
230 VAC Servomotors Incremental Encoder									
R2AA04010FXH1CM	100	3000	6000	0.318	0.318	1.18	$0.0627x10^{-4}$	40	346
R2AA04010FCH1CM6	100	3000	6000	0.286	0.318	1.18	$0.0627x10^{-4}$	40	346
R2AA06020FXH11M	200	3000	6000	0.637	0.686	2.20	$0.219x10^{-4}$	60	347
R2AA06020FCH11M	200	3000	6000	0.637	0.686	2.20	$0.219x10^{-4}$	60	347
R2AA06040FXH11M	400	3000	6000	1.270	1.370	4.80	$0.412x10^{-4}$	60	348
R2AA06040FCH11M6	400	3000	6000	1.15	1.370	4.80	$0.412x10^{-4}$	60	348
R2AA08075FXH11M	750	3000	6000	2.390	2.550	8.50	$1.820x10^{-4}$	80	349
R2AA08075FCH11M	750	3000	6000	2.390	2.550	8.50	$1.820x10^{-4}$	80	349
R2AAB8100HXH29M	1000	3000	3000	3.180	3.920	11.60	$2.383x10^{-4}$	86	350
R2AAB8100HCH29M	1000	3000	3000	3.180	3.920	11.60	$2.383x10^{-4}$	86	350
Q2AA10150BXH48M	1500	2000	2000	7.2	7.7	20.5	$8x10^{-4}$	100	351
Q2AA10150BCH48M	1500	2000	2000	7.2	7.7	20.5	$8x10^{-4}$	100	351
R1AA10150FXH00M	1500	3000	6000	4.8	4.9	15	$2x10^{-4}$	100	352
R1AA10150FCH00M	1500	3000	6000	4.8	4.9	15	$2x10^{-4}$	100	352
R2AA13200LXHW0M	2000	2000	3000	9.5	12.0	24.0	$12.2x10^{-4}$	130	353
R2AA13200LCHW0M	2000	2000	3000	9.5	12.0	24.0	$12.2x10^{-4}$	130	353
R1AA13300FXH00M	3000	3000	6000	9.7	9.7	29.0	$7x10^{-4}$	130	354
R1AA13300FCH00M	3000	3000	6000	9.7	9.7	29.0	$7x10^{-4}$	130	354

SERVOMOTORS

	NOMINAL POWER (W)	NOMINAL SPEED (rpm)	MAX SPEED (rpm)	NOMINAL TORQUE (Nm)	STALL TORQUE (Nm)	MAX TORQUE (Nm)	INERTIA (Kg x m^2)	FLANGE SIZE (mm)	PAGE
400 VAC Servomotors Battery Less Multi-turn Absolute Encoder									
R2CA18350LXR00M	3500	2000	3000	17.0	22.0	49.0	$40x10^{-4}$	180	357
R2CA18450HXR00M	4500	2000	3500	21.5	30.0	75.0	$50x10^{-4}$	180	358
R2CA18750HCR00M	7500	1500	3000	48.0	54.9	140	$98x10^{-4}$	180	359
400 VAC Servomotors Incremental Encoder									
R2CA18350LXH00M	3500	2000	3000	17.0	22.0	49.0	$40x10^{-4}$	180	361
R2CA18450HXH00M	4500	2000	3500	21.5	30.0	75.0	$50x10^{-4}$	180	362
R2CA2215KVXH00M	15.000	1500	2000	95.0	95.0	215	$288x10^{-4}$	220	363

SERVO SYSTEMS

48 VDC SERVOAMPLIFIERS

For cable options please see the table at the end of the section.

SANMOTION R AC SERVO SYSTEMS | ADVANCED MODEL | SIL2 SAFE TORQUE OFF (STO) | 48 VDC | ULTRA COMPACT SIZE | EtherCAT®

48 VDC SERVOAMPLIFIERS

R Advanced series - 48VDC EtherCAT servo drive with STO

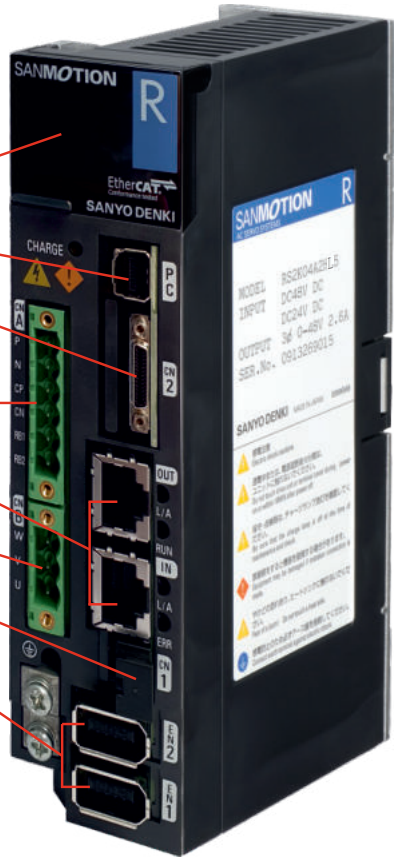

FIVE DIGIT DISPLAY: it allows to monitor amplifier and EtherCAT Network.

Rs232 PC INTERFACE: set up and monitor by SanMotion Motor Setup

I/O CONNECTOR: 6 inputs and 2 outputs user configurable.

INPUT POWER SUPPLY CONNECTORS: two separated power supplies. One for the control board (24VDC), and one for the power stage (48VDC). Built in protection against overload and input overvoltage.

EtherCAT **INTERFACE CONNECTORS:** RJ45

MOTOR POWER CONNECTORS

SAFE TORQUE OFF - SIL2 CONNECTOR

! **ENCODER CONNECTORS -** Second encoder for external linear scale to avoid backlash.

Dimensions:
mm 40x160x85
Model: RS2K04A2HL5

c UL us

MAIN FEATURES

- Amplifier capacity: 40A
- Mode of Operation: Homing Mode, Profile Velocity Mode, Profile Position Mode, Profile Torque Mode, Cycle Sync Position Mode, Cycle Sync Velocity Mode, Cycle Sync Torque Mode.
- Speed frequency response of 800 Hz
- EtherCAT cycle time: up to 125 microsec
- External Regenerative Resistor (optional)
- Built-In Dynamic Brake
- Safe Torque Off(STO) Function: SIL2, IEC62061 : SILCL2, ISO 13894-1 Cat3 : PL=d
- RS2K04A2HL5 amplifier covers motors from 20W to 200W

TECHNICAL DATA	EtherCAT control
MODEL	RS2K04A2HL5
MAX CURRENT	40 A
MOTOR OUTPUT STAGE	IGBT, PWM control, sinusoidal current
POWER SUPPLY VOLTAGE	48 VDC (±10%)
LOGIC SUPPLY VOLTAGE	24 VDC (±10%)
DIMENSIONS (mm)	40x160x85
MASS (kg)	0,50 Kg

SANMOTION R AC SERVO SYSTEMS | ADVANCED MODEL | SIL2 SAFE TORQUE OFF (STO) | 48 VDC | ULTRA COMPACT SIZE | EtherCAT®

48 VDC SERVOAMPLIFIERS

R Advanced series - 48VDC EtherCAT servo drive with STO

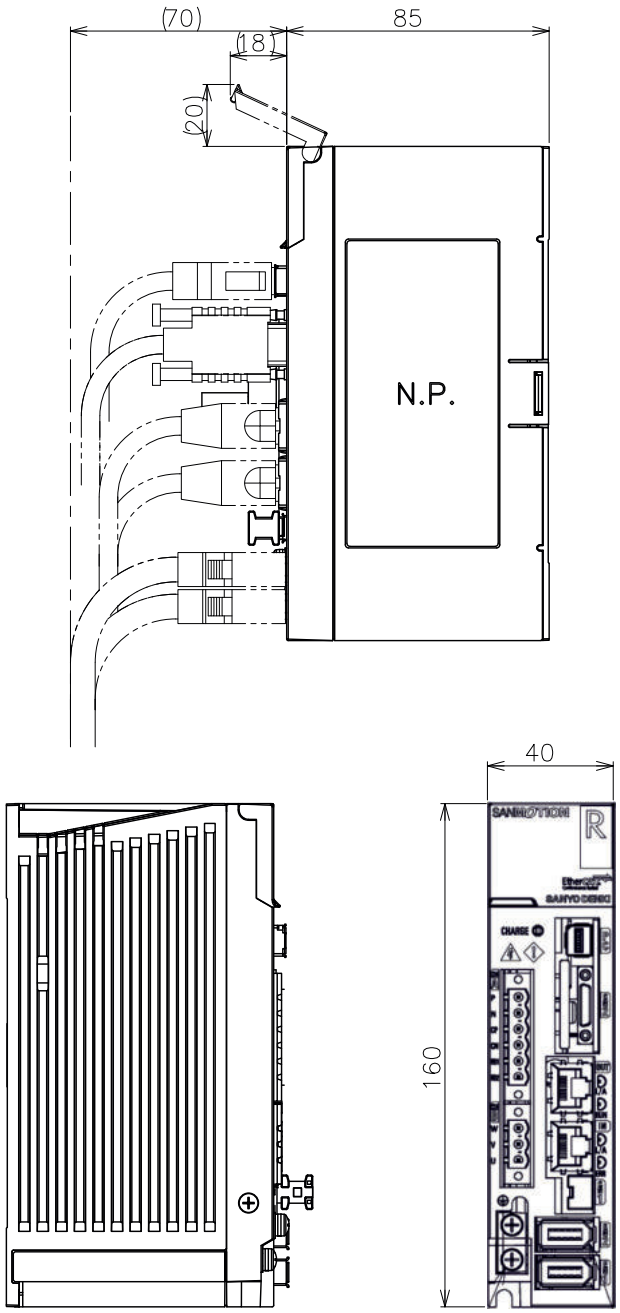

SANMOTION R AC SERVO SYSTEMS | ADVANCED MODEL | SIL3 SAFE TORQUE OFF (STO) | 48 VDC | 4 AXIS SYSTEM | EtherCAT®

48 VDC SERVOAMPLIFIERS

1 DRIVE 4 MOTORS

R Advanced series - 48VDC 4 AXIS EtherCAT servo drive with STO

INPUT POWER SUPPLY CONNECTORS: two separated power supply. One for the control board (24VDC), and one for the power stage (48VDC). Built in protection against overload and input overvoltage.

LED DISPLAY STATUS MONITOR: it allows to monitor the status of the amplifier.

EXTERNAL REGENERATIVE RESISTOR (Optional)

I/O CONNECTORS: 8 Inputs + 8 Outputs user configurable.

ENCODER CONNECTORS

Rs232 PC INTERFACE: set up and monitor by SanMotion Motor Setup

! **SAFE TORQUE OFF - SIL3 CONNECTOR** SIL3 SAFE TORQUE OFF (STO)

EtherCAT INTERFACE CONNECTORS: RJ45

MOTOR POWER CONNECTORS

Dimensions:
mm 50x200x130
Model: RF2K24A0HL5

c UL us

MAIN FEATURES

- Amplifier capacity: 40A
- Mode of Operation: Homing Mode, Profile Velocity Mode, Profile Position Mode, Profile Torque Mode, Cycle Sync Position Mode, Cycle Sync Velocity Mode, Cycle Sync Torque Mode.
- Speed frequency response of 800 Hz
- EtherCAT cycle time: up to 125 microsec
- External Regenerative Resistor (optional)
- Safe Torque Off(STO) Function: SIL3/IEC61508. PL=e/ISO 13894-1
- RF2K24A0HL5 amplifier covers motors up to 300W (4 axes)

TECHNICAL DATA	EtherCAT control
MODEL	RF2K24A0HL5
MAX CURRENT	40 A
MOTOR OUTPUT STAGE	IGBT, PWM control, sinusoidal current
POWER SUPPLY VOLTAGE	48 VDC (±10%)
LOGIC SUPPLY VOLTAGE	24 VDC (±10%)
DIMENSIONS (mm)	50x200x130
MASS (kg)	0,8 Kg

SANMOTION R AC SERVO SYSTEMS | ADVANCED MODEL | SIL3 SAFE TORQUE OFF (STO) | 48 VDC | 4 AXIS SYSTEM | EtherCAT®

48 VDC SERVOAMPLIFIERS

1 DRIVE 4 MOTORS

R Advanced series - 48VDC 4 AXIS EtherCAT servo drive with STO

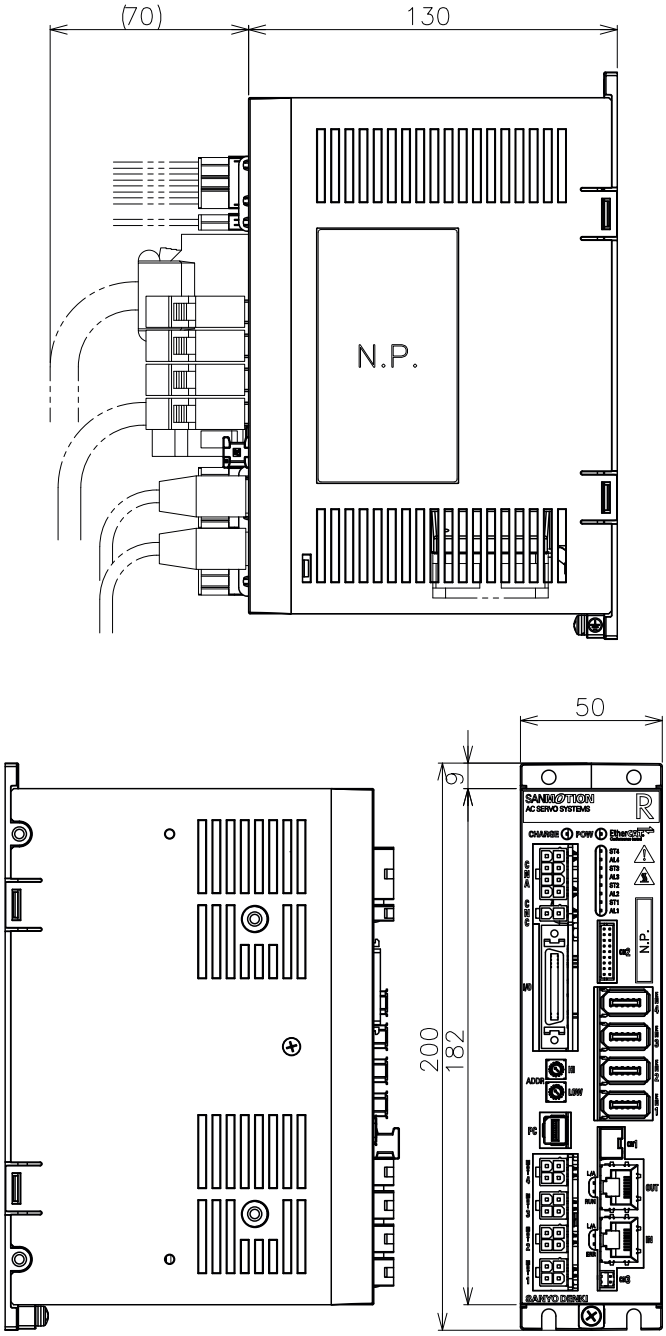

SANMOTION R AC SERVO SYSTEMS | ADVANCED MODEL | 48 VDC | ULTRA COMPACT SIZE | PULSE TRAIN

48 VDC SERVOAMPLIFIERS

R Advanced series - 48 VDC Pulse-Train interface servodrive

INPUT POWER SUPPLY CONNECTORS: two separated power supplies. One for the control board (5VDC), and one for the power stage (48VDC). Built in protection against overload and input overvoltage.

LED DISPLAY STATUS MONITOR: it allows to monitor the status of the amplifier.

I/O CONNECTOR: pulse train input (clock + direction; forward + backward pulse; 90 phase shift) - - encoder output.

I/O CONNECTOR: 8 inputs + 8 outputs user configurable.

ENCODER CONNECTOR

MOTOR POWER CONNECTORS

Rs232 PC INTERFACE: set up and monitor by SanMotion Motor Setup

MAIN FEATURES

- Amplifier capacity: 40A
- Speed frequency response of 1,2 KHz
- Built-In Dynamic Brake
- RF2G21A0A00 amplifier covers motors from 20W to 200W

Dimensions:
mm 30x116x70
Model: RF2G21A0AA0

c UL us

TECHNICAL DATA	POSITION
MODEL	RF2G21A0AA0
MAX CURRENT	40 A
MOTOR OUTPUT STAGE	IGBT, PWM control, sinusoidal current
POWER SUPPLY VOLTAGE	48 VDC (±10%)
LOGIC SUPPLY VOLTAGE	5 VDC (± 5%)
DIMENSIONS (mm)	30x116x70
MASS (kg)	0,25 Kg

SANMOTION R AC SERVO SYSTEMS | ADVANCED MODEL | 48 VDC | ULTRA COMPACT SIZE | PULSE TRAIN

48 VDC SERVOAMPLIFIERS

R Advanced series - 48 VDC Pulse-Train interface servodrive

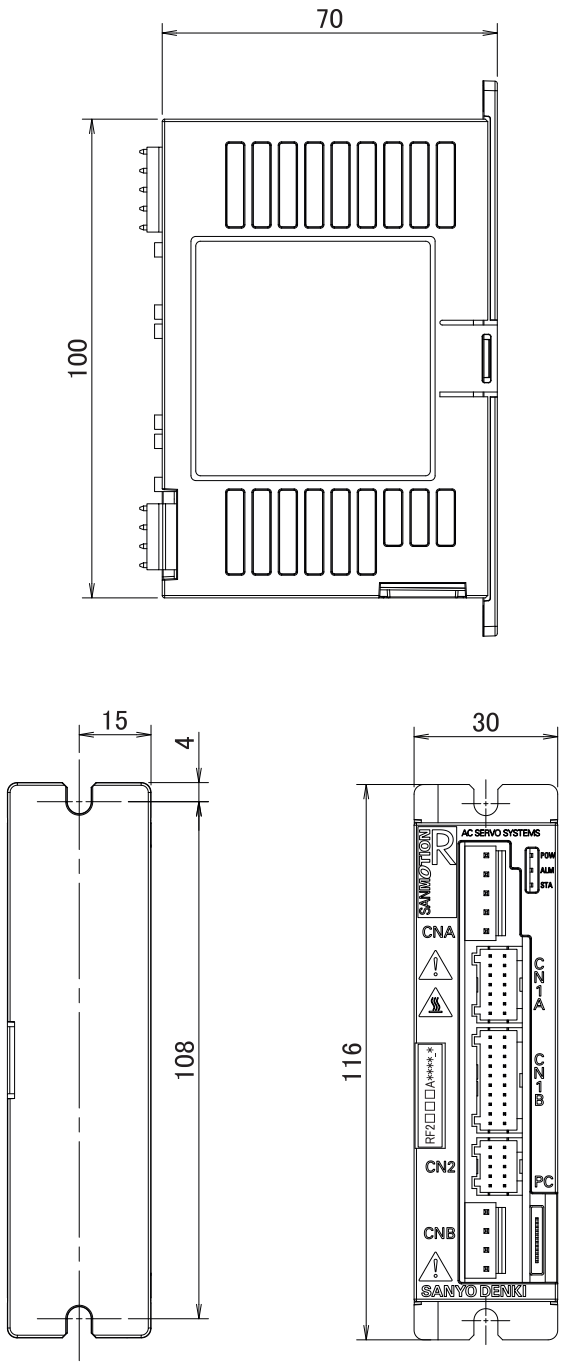

SERVO SYSTEMS

230 VAC SERVOAMPLIFIERS

For cable options please see the table at the end of the section.

SANMOTION AC SERVO SYSTEMS RS3 | 230 VAC | SIL3 SAFE TORQUE OFF (STO) | EtherCAT | 3rd GENERATION!

230 VAC SERVOAMPLIFIERS

RS3 SERIES AC SERVOAMPLIFIERS - EtherCAT INTERFACE & STO

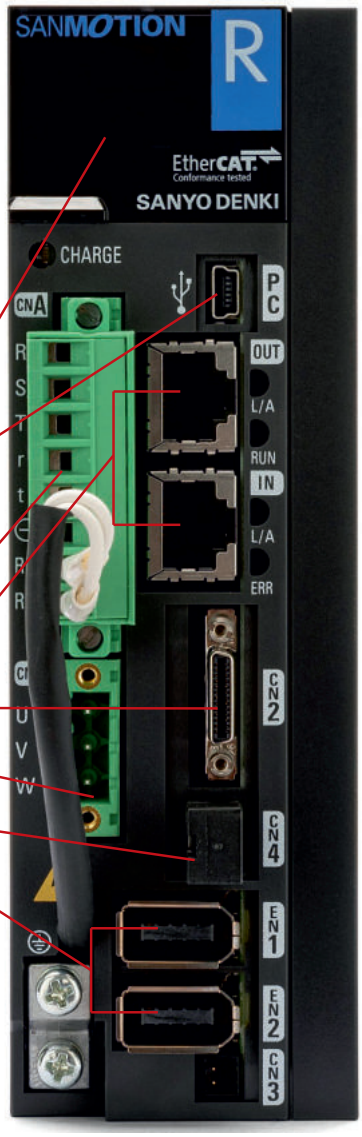

FIVE DIGIT DISPLAY: It allows to monitor amplifier and EtherCAT Network.

PC CONNECTOR: The amplifier can be set and monitored by means of Personal Computer USB interface.

POWER CONNECTOR: 230VAC, single-phase or three-phase (configurable by user). Power sections kept separated for logic/signal and power. Built-in protection circuits against overload and input overvoltage.
Internal regenerative resistor. External regenerative resistor (optional)

EtherCAT INTERFACE CONNECTOR: RJ45 - CAT5e.

I/O CONNECTOR: 7 inputs and 2 outputs.

MOTOR POWER CONNECTOR

! SAFE TORQUE OFF - SIL3 CONNECTOR SIL3 SAFE TORQUE OFF (STO)

! **SECOND ENCODER CONNECTOR FOR EXTERNAL LINEAR SCALE TO AVOID BACKLASH**

Dimensions:
(50x160x130)
Model RS3A03A2HA4W00P

c UL us

MAIN FEATURES OF THE 3rd GENERATION

- Mode of Operation: Homing Mode, Profile Velocity Mode, Profile Position Mode, Profile Torque Mode, Cycle Sync Position Mode, Cycle Sync Velocity Mode, Cycle Sync Torque Mode.
- Touch Probe Function.
- Speed frequency response of 2.2 kHz [3.3 times that of previous RS1 model!]
- Safe Torque Off (STO) function - SIL3/IEC61508. Performance Level - PL = e/ISO13849-1
- RS3A03A2HA4W00P covers 100W, 200W, 400W, 750W, 1000W, 1500W motors

TECHNICAL DATA	EtherCAT Control		
MODEL	RS3A03A2HA4W00P	RS3A05A2HA4W00P	RS3A10A2HA4W00P
MAX CURRENT	30 Amp	50 Amp	100 Amp
MOTOR OUTPUT STAGE	IGBT, PWM control, sinusoidal current		
POWER SUPPLY VOLTAGE	Single-phase or three-phase (configurable by the user) 200 VAC or 230 VAC (+10%, -15%) 50/60 Hz (± 3 Hz)		
LOGIC SUPPLY VOLTAGE	Single-phase from 200 VAC to 230 VAC (+10%, -15%) 50/60 Hz (± 3 Hz)		
DIMENSIONS (mm)	50x160x130	85x160x130	100x235x220
MASS (kg)	0.9	1.65	4.2

SANMOTION AC SERVO SYSTEMS RS3 | 230 VAC | SIL3 SAFE TORQUE OFF (STO) | EtherCAT®

"RS3A" SERIES AC SERVOAMPLIFIERS:

EtherCAT VERSION OUTLINE DRAWINGS

RS3A03A2HA4W00P

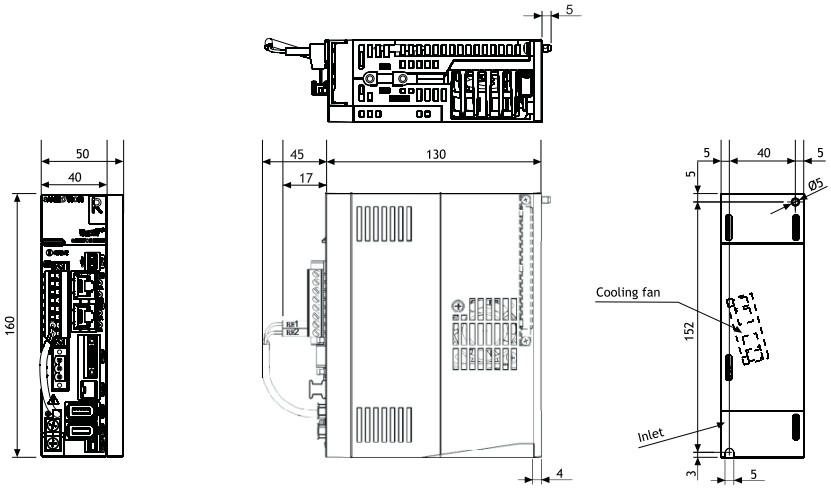

RS3A05A2HA4W00P

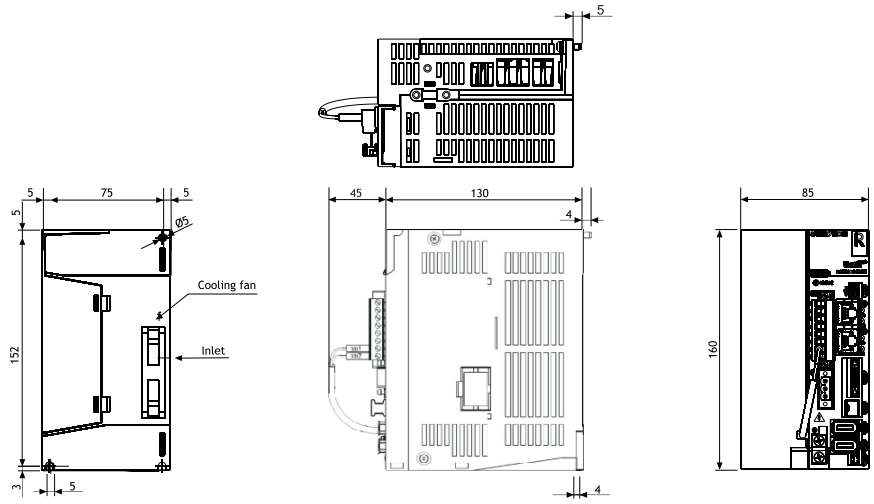

RS3A10A2HA4W00P

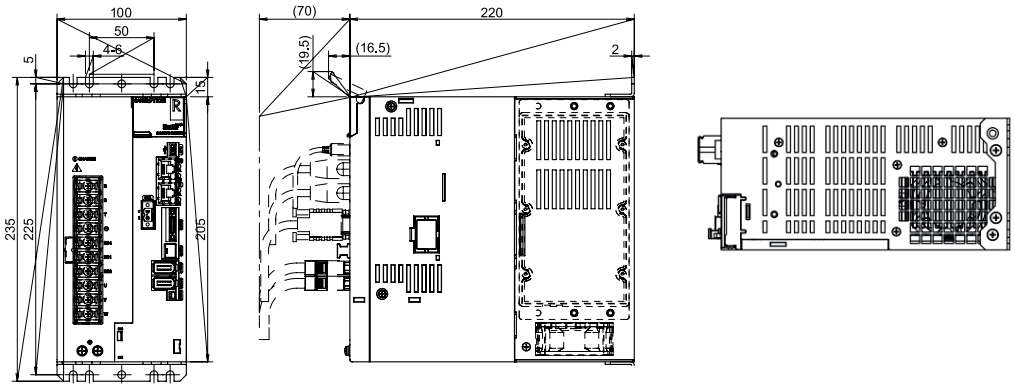

Dimensions mm.

SANMOTION AC SERVO SYSTEMS RS3 | 230 VAC | SIL3 SAFE TORQUE OFF (STO) | EtherCAT

3rd GENERATION!

230 VAC SERVOAMPLIFIERS

ADVANCED SAFETY MODULE

RS3 SERIES AC SERVOAMPLIFIERS - EtherCAT INTERFACE & STO

FIVE DIGIT DISPLAY: It allows to monitor amplifier and EtherCAT Network.

PC CONNECTOR: The amplifier can be set and monitored by means of Personal Computer USB interface.

POWER CONNECTOR: 230VAC, single-phase or three-phase (configurable by user). Power sections kept separated for logic/signal and power. Built-in protection circuits against overload and input overvoltage.
Internal regenerative resistor. External regenerative resistor (optional)

EtherCAT INTERFACE CONNECTOR: RJ45 - CAT5e.

I/O CONNECTOR: 7 inputs and 2 outputs.

MOTOR POWER CONNECTOR - CONNETTORE POTENZA MOTORE

SAFE TORQUE OFF SIL3 CONNECTOR

SECOND ENCODER CONNECTOR FOR EXTERNAL LINEAR SCALE TO AVOID BACKLASH

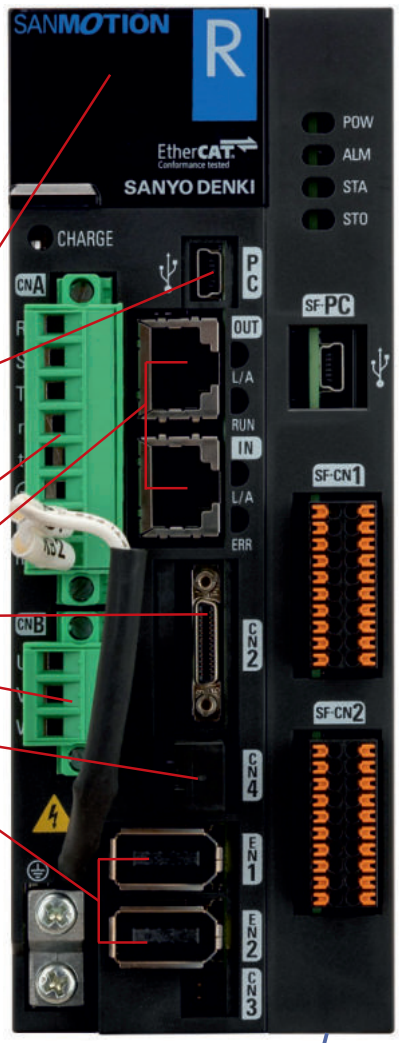

Dimensions:
(60x160x130)
Model RS3A03A2HAE

ADVANCED SAFETY MODULE

MAIN FEATURES OF THE 3rd GENERATION

- Mode of Operation: Homing Mode, Profile Velocity Mode, Profile Position Mode, Profile Torque Mode, Cycle Sync Position Mode, Cycle Sync Velocity Mode, Cycle Sync Torque Mode.
- Touch Probe Function.
- Speed frequency response of 2.2 kHz [3.3 times that of previous RS1 model!]
- Safe Torque Off (STO) function - SIL3/IEC61508. Performance Level - PL = e/ISO13849-1
- One single size covers 100W, 200W, 400W, 750W, 1000W, 1500W motors

c UL us

TECHNICAL DATA	EtherCAT Control
MODEL	RS3A03A2HAE
MAX CURRENT	30 Amp
MOTOR OUTPUT STAGE	IGBT, PWM control, sinusoidal current
POWER SUPPLY VOLTAGE	Single-phase or three-phase (configurable by the user) 200 VAC or 230 VAC (+10%, -15%) 50/60 Hz (± 3 Hz)
LOGIC SUPPLY VOLTAGE	Single-phase from 200 VAC to 230 VAC (+10%, -15%) 50/60 Hz (± 3 Hz)
DIMENSIONS (mm)	60x160x130
MASS (kg)	1.1

SAFETY FUNCTION SPECIFICATIONS	
	DESCRIPTION
STO	SAFE TORQUE OFF
SS1	SAFE STOP 1
SS2	SAFE STOP 2
SOS	SAFE OPERATING STOP
SLS	SAFELY-LIMITED SPEED
SBC	SAFE BRAKE CONTROL
SSM	SAFE SPEED MONITOR

SANMOTION AC SERVO SYSTEMS RS3 | 230 VAC | SIL3 SAFE TORQUE OFF (STO) | ADVANCED SAFETY MODULE | EtherCAT

"RS3A" SERIES AC SERVOAMPLIFIERS:

EtherCAT VERSION OUTLINE DRAWINGS

RS3A03A2HAE

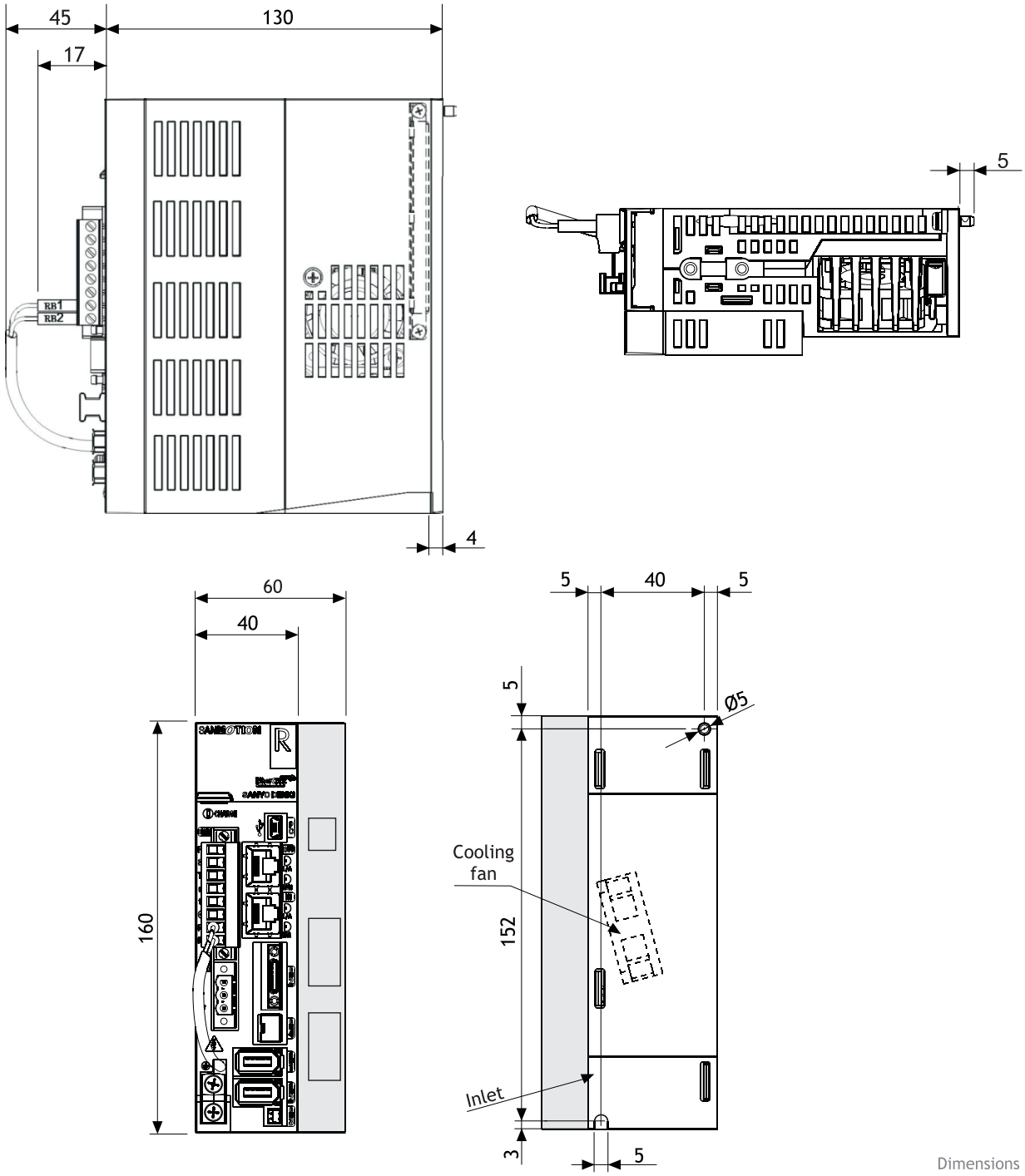

Dimensions mm.

SANMOTION G AC SERVO SYSTEMS

EtherCAT

SIL3 SAFE TORQUE OFF (STO)

7th gen

230 VAC G SERVOAMPLIFIERS

EtherCAT INTERFACE

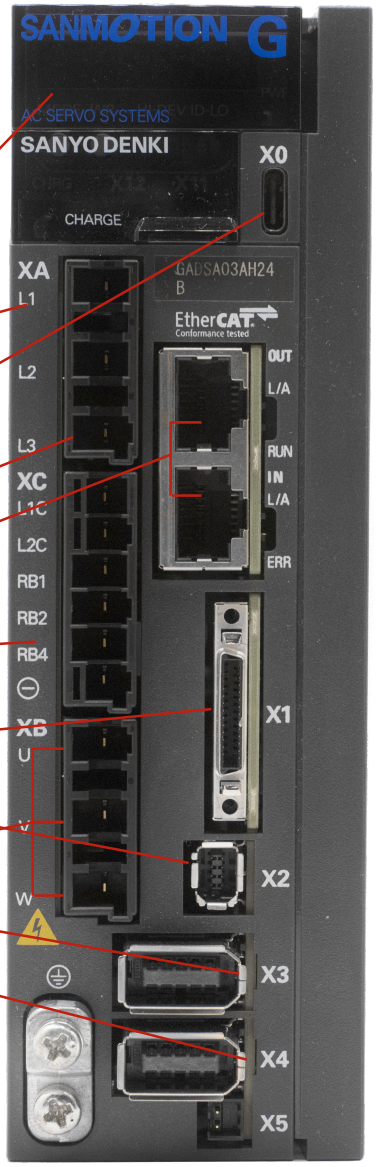

FIVE DIGIT DISPLAY: It allows to monitor in real time the amplifier status

Fast Plug-in connector

PC CONNECTOR: The amplifier can be set and monitored by SanMotion motor setup and a Personal Computer USB 3.0 interface

POWER CONNECTION: 230 VAC, single-phase / three-phase;
Built-in protection circuits against overload and input overvoltage

EtherCAT INTERFACE CONNECTOR: RJ45 - CAT5e

Regenerative internal resistor or external regenerative resistor (optional);
Regenerative resistor and logic power supply connector

I/O CONNECTOR: 7 inputs and 2 outputs
Encoder output repetition connector NEW!

SAFE TORQUE OFF - SIL3 Pl=e CONNECTOR SIL3 SAFE TORQUE OFF (STO)

MOTOR POWER CONNECTOR (U-V-W phases)

ENCODER CONNECTOR (X3)

SECOND ENCODER CONNECTOR (X4) for external linear scale to avoid backlash

Model GADSA03AH24
Dimensions: (50x160x130)

MAIN FEATURES

- Safe Torque O ff(STO) function - SIL3 [Performance Level - PL = E]
- Mode of Operations: Homing Mode, Profile Velocity Mode, Profile Position Mode, Profile Torque Mode, Cycle Sync Position Mode, Cycle Sync Velocity Mode, Cycle Sync Torque Mode
- One single amplifier size covers from 100 W to 1.5 kW motors
- XML file available
- Speed frequency response of 3.5 kHz

TECHNICAL DATA	
MODEL	GADSA03AH24
CURRENT CAPACITY	30 Amp
POWER SUPPLY VOLTAGE	Single-phase or three-phase (configurable by the user) 200VAC or 230 VAC (+10%, -15%) 50/60 Hz (± 3 Hz)
LOGIC POWER SUPPLY	Single-phase from 200VAC to 230 VAC (+10%, -15%) 50/60 Hz (± 3 Hz)
MAX COMPATIBLE MOTOR OUTPUT	1.5 kW
DIMENSIONS (mm)	50x160x130
Mass (kg)	0.90 kg

SANMOTION G AC SERVO SYSTEMS

EtherCAT

SIL3 SAFE TORQUE OFF (STO)

c UL us

230 VAC G SERVOAMPLIFIERS

G SERIES AC SERVOAMPLIFIERS - EtherCAT INTERFACE

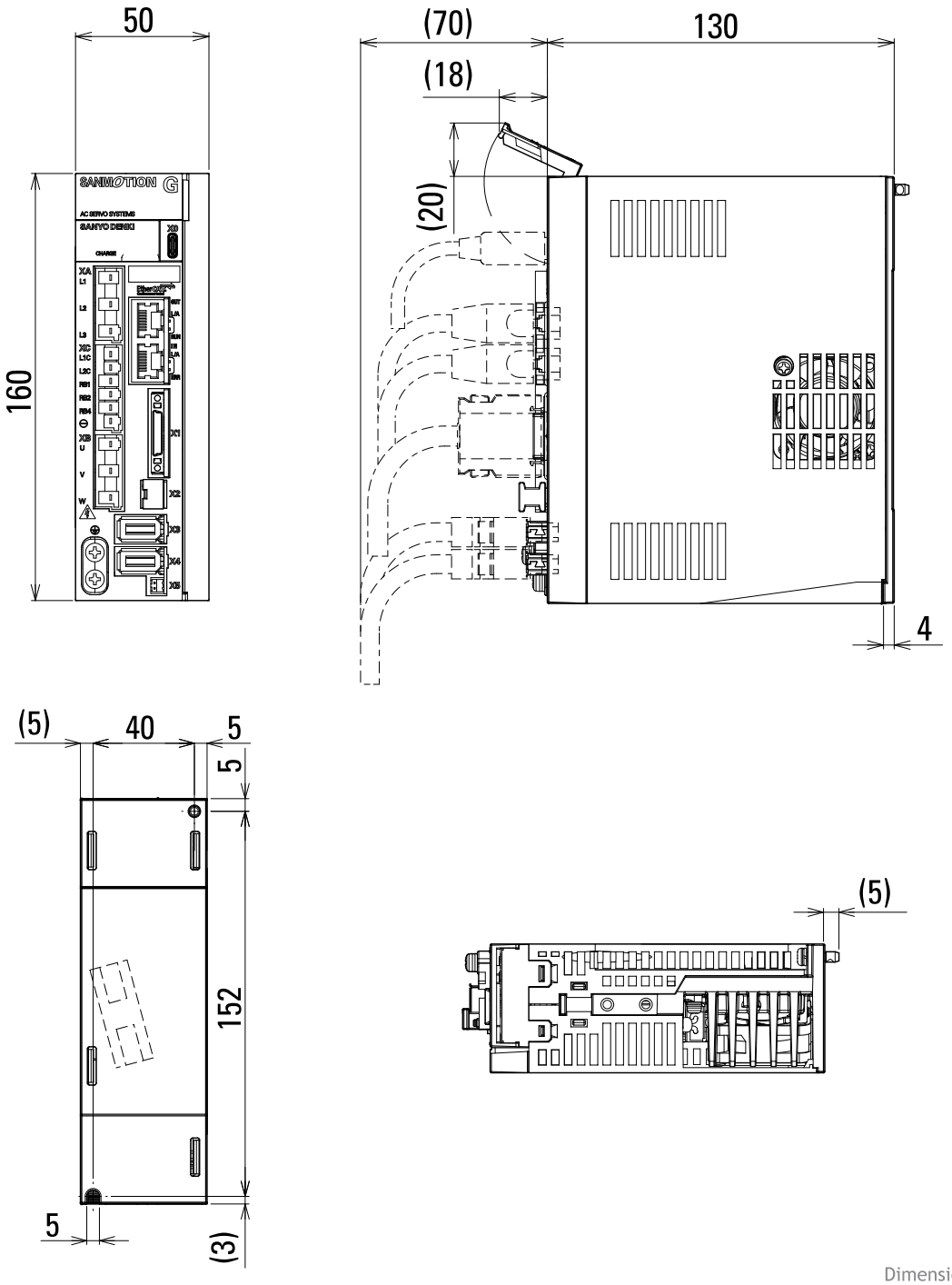

Dimensions mm.

SANMOTION G AC SERVO SYSTEMS

EtherCAT®

SIL3 SAFE TORQUE OFF (STO)

c UL us

7th gen

2-Axis Integrated AC Servo Amplifier

G SERIES AC SERVOAMPLIFIERS - EtherCAT INTERFACE

Why one 2-Axis servo amplifier is better than two 1-Axis servo amplifiers

- **Compact & lighter** than 2 servodrives
- **Reduced wiring**
- **Energy savings**
  The regenerative energy generated during the deceleration of one axis can be effectively reused to power the other axis
- Two axes can be **operated in Sync** and with simple commands
  A clever solution
- Two different motor powers can be controlled
  Tailor-made for customer needs

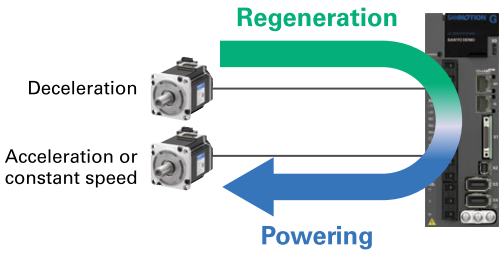

Main features

- Safe Torque Off (STO) function - SIL3 [Performance Level - PL = E]
- Mode of Operations: Homing Mode, Profile Velocity Mode, Profile Position Mode, Profile Torque Mode, Cycle Sync Position Mode, Cycle Sync Velocity Mode, Cycle Sync Torque Mode
- Axis 1/2 compatible with absolute encoder
- XML file available
- Speed frequency response of 3.5 kHz

TECHNICAL DATA		
MODEL	GADWA22AH14	GADWA33AH14
CURRENT CAPACITY	20 Amp x 2 axes	30 Amp x 2 axes
MAX COMPATIBLE MOTOR OUTPUT	800 W	1.5 kW
LOGIC POWER SUPPLY	Single-phase from 200VAC to 240 VAC (+10%, -15%) 50/60 Hz (± 3 Hz)	
POWER SUPPLY VOLTAGE	Single-phase or three-phase (configurable by the user) 200VAC or 240 VAC (+10%, -15%) 50/60 Hz (± 3 Hz)	

SANMOTION G AC SERVO SYSTEMS

EtherCAT®

SIL3 SAFE TORQUE OFF (STO)

c UL us

2-Axis Integrated AC Servo Amplifier

G SERIES AC SERVOAMPLIFIERS - EtherCAT INTERFACE

GADWA22AH14

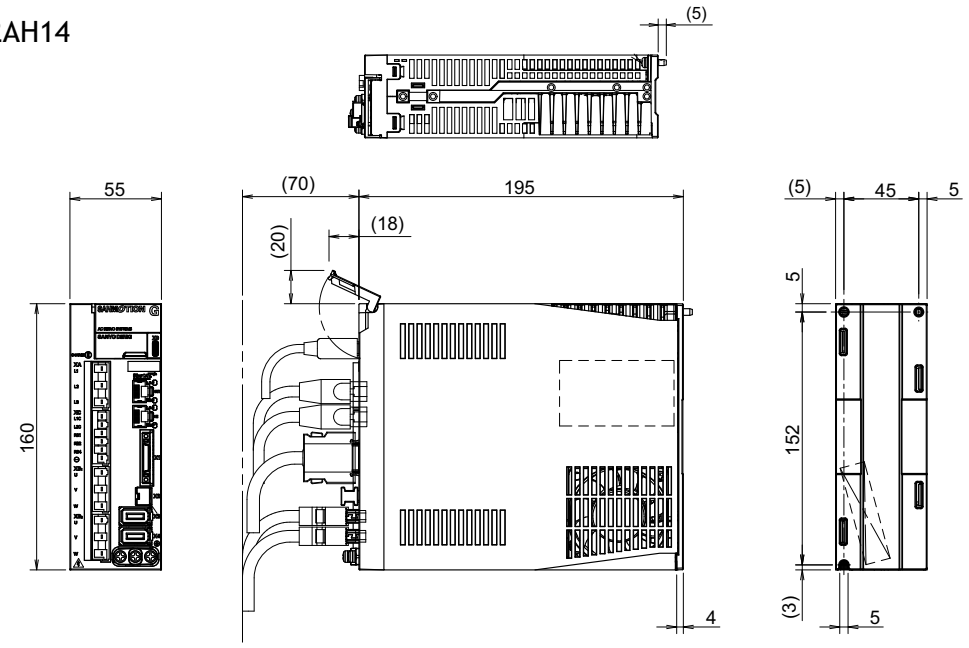

GADWA33AH14

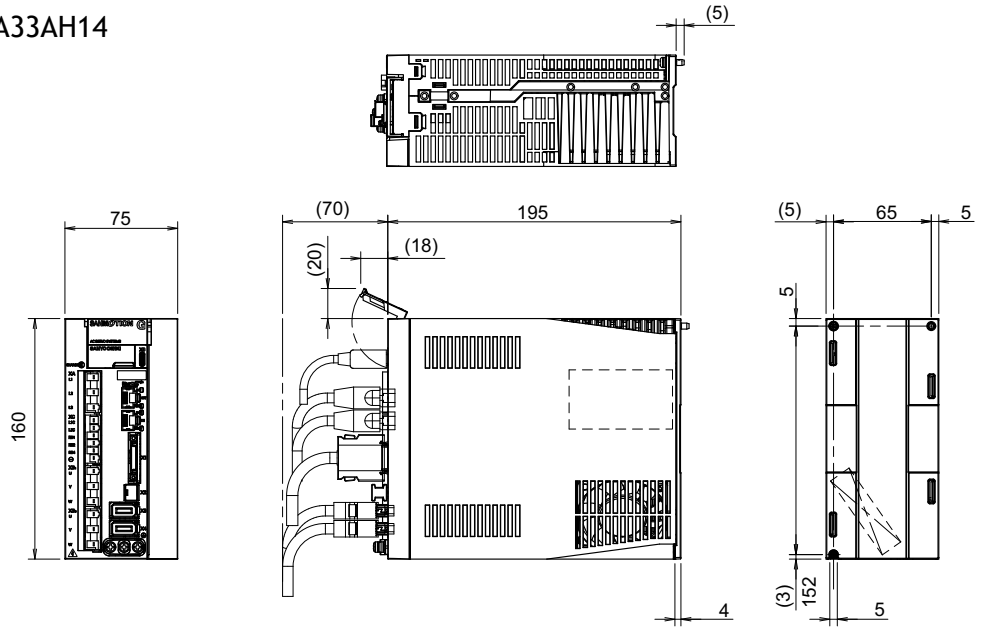

Dimensions mm.

SANMOTION AC SERVO SYSTEMS RS3 | 230 VAC | PULSE TRAIN ANALOG INPUT | ULTRA COMPACT SIZE | 3rd GENERATION!

230 VAC SERVOAMPLIFIERS

RS3 SERIES AC SERVOAMPLIFIERS - TRADITIONAL INTERFACE

FIVE DIGIT DISPLAY AND OPERATION KEY: It allows to view and modify parameters and monitor in real time the behavior of the system.

PC CONNECTOR: The amplifier can be set and monitored by means of Personal Computer USB interface.

POWER CONNECTOR: 230VAC, single-phase or three-phase (configurable by user). Power sections kept separated for logic/signal and power electronics. Built-in protection circuits against overload and input overvoltage.
External regenerative resistor (optional).

I/O CONNECTOR: Control pulse train (clock + direction; forward + backward pulse; 90° phase shift) or analog signal (proportional to speed or torque). 8 inputs and 8 outputs.

MOTOR POWER CONNECTOR

ENCODER CONNECTOR

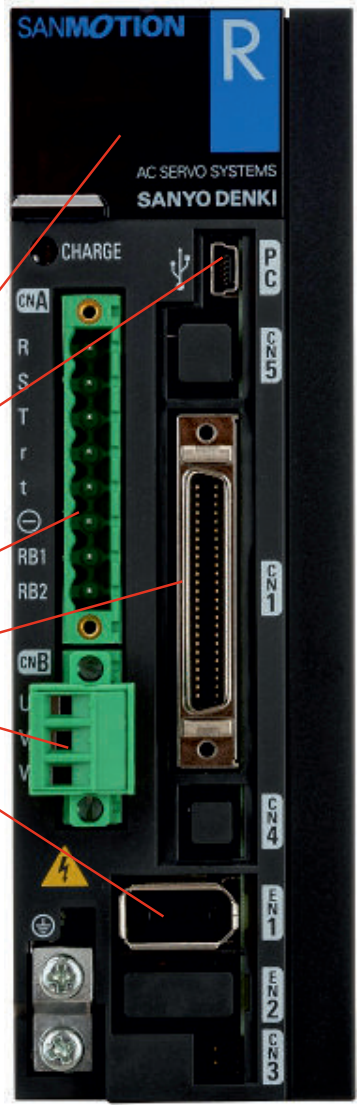

Dimensions:
(50x160x130)
RS3A03A0AL0W00P

MAIN FEATURES OF THE 3rd GENERATION

- Speed frequency response of 2.2 kHz [3.3 times that of previous RS1 models!]
- One single size covers 100W, 200W, 400W, 750W, 1000W, 1500W motors
- CN1 connector wiring fully compatible with previous RS1 models
- Sanmotion Motor Setup allows multitasking system settings

TECHNICAL DATA	Position, Velocity, Torque Control Mode Switching available
MODEL	RS3A03A0AL0W00P
MAX CURRENT	30 Amp
MOTOR OUTPUT STAGE	IGBT, PWM control, sinusoidal current
POWER SUPPLY VOLTAGE	Single-phase or three-phase (configurable by the user) 200 VAC to 230 VAC (+10%, -15%) 50/60 Hz (± 3 Hz)
LOGIC SUPPLY VOLTAGE	Single-phase from 200 VAC to 230 VAC (+10%, -15%) 50/60 Hz (± 3 Hz)
DIMENSIONS (mm)	50x160x130
MASS (kg)	0.8

SANMOTION AC SERVO SYSTEMS RS3 | 230 VAC | SIL3 SAFE TORQUE OFF (STO) | PULSE TRAIN ANALOG INPUT | ULTRA COMPACT SIZE

"RS3A" SERIES AC SERVOAMPLIFIERS:
PULSE TRAIN AND ANALOG INPUT VERSION OUTLINE DRAWINGS

RS3A03A0AL0W00P

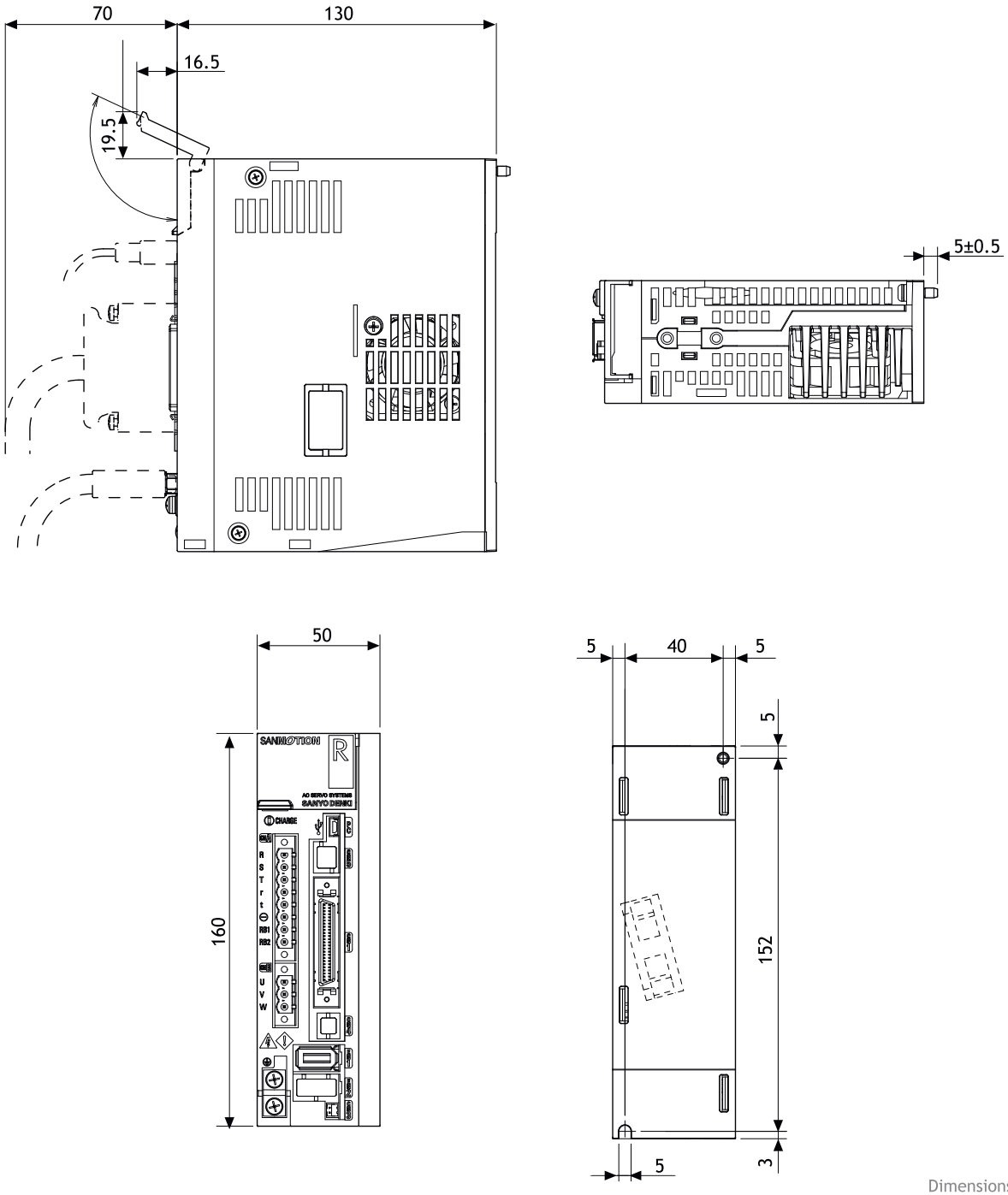

Dimensions mm.

SANMOTION AC SERVO SYSTEMS RS3 | 230 VAC | SIL3 SAFE TORQUE OFF (STO) | PULSE TRAIN ANALOG INPUT | ULTRA COMPACT SIZE | 3rd GENERATION!

230 VAC SERVOAMPLIFIERS

RS3 SERIES AC SERVOAMPLIFIERS - TRADITIONAL INTERFACE

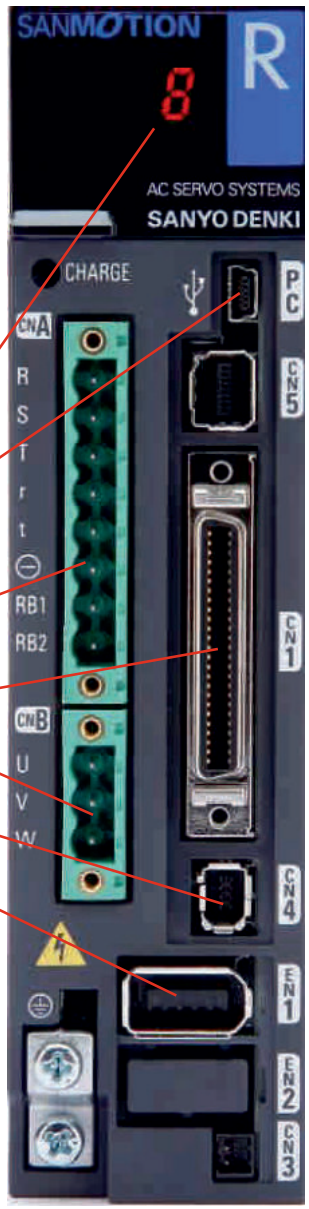

FIVE DIGIT DISPLAY AND OPERATION KEY: It allows to view and modify parameters and monitor in real time the behavior of the system.

PC CONNECTOR: The amplifier can be set and monitored by means of Personal Computer USB interface.

POWER CONNECTOR: 230VAC, single-phase or three-phase (configurable by user). Power sections separated for logic/signal and power electronics. Built-in protection circuits against overload and input overvoltage.
External regenerative resistor (optional).

I/O CONNECTOR: Control pulse train (clock + direction; forward + backward pulse; 90° phase shift) or analog signal (proportional to speed or torque). 8 inputs and 8 outputs setting by user.

MOTOR POWER CONNECTOR

! SAFE TORQUE OFF - SIL3 CONNECTOR SIL3 SAFE TORQUE OFF (STO)

ENCODER CONNECTOR

MAIN FEATURES OF THE 3rd GENERATION

SIL3 SAFE TORQUE OFF (STO)

- Safe Torque Off (STO) function - SIL3/IEC61508
  Performance Level - PL = e/ISO13849-1
- Speed frequency response of 2.2 kHz [3.3 times that of previous RS1 model!]
- Ultra compact size - see photo

Dimensions:
(40x160x130)
Model RS3A02A0AL2

c UL us

TECHNICAL DATA	Position, Velocity, Torque (Control Mode Switching available)		
MODEL	RS3A03A0AL2	RS3A05A0AA2	RS3A10A0AA2
MAX CURRENT	30 Amp	50 Amp	100 Amp
MOTOR OUTPUT STAGE	IGBT, PWM control, sinusoidal current		
POWER SUPPLY VOLTAGE	Single-phase or three-phase (configurable by the user) 200 VAC to 230 VAC (+10%, -15%) 50/60 Hz (± 3 Hz)		
LOGIC SUPPLY VOLTAGE	Single-phase from 200 VAC to 230 VAC (+10%, -15%) 50/60 Hz (± 3 Hz)		
DIMENSIONS (mm)	50x160x130	85x160x130	100x235x220
MASS (kg)	0.85	1.55	4.2

SANMOTION AC SERVO SYSTEMS RS3 | 230 VAC | SIL3 SAFE TORQUE OFF (STO) | PULSE TRAIN ANALOG INPUT | ULTRA COMPACT SIZE

"RS3A" SERIES AC SERVOAMPLIFIERS:

PULSE TRAIN AND ANALOG INPUT VERSION OUTLINE DRAWINGS

RS3A03A0AL2

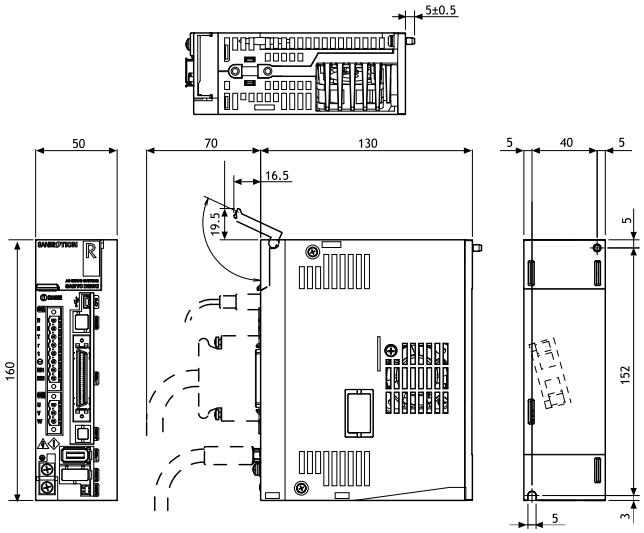

RS3A05A0AA2

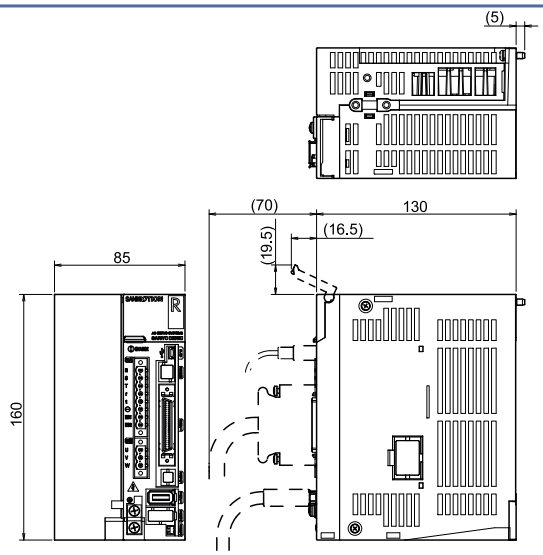

RS3A10A0AA2

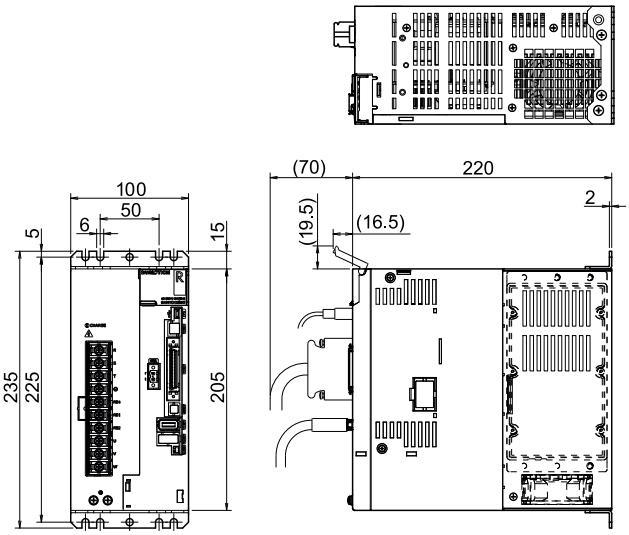

Dimensions mm.

SERVO SYSTEMS

400 VAC SERVOAMPLIFIERS

For cable options please see the table at the end of the section.

SANMOTION AC SERVO SYSTEMS RS3C | 400 VAC | SIL3 SAFE TORQUE OFF (STO) | EtherCAT®

3rd GENERATION!

400 VAC SERVOAMPLIFIERS

RS3C SERIES AC SERVOAMPLIFIERS - EtherCAT INTERFACE

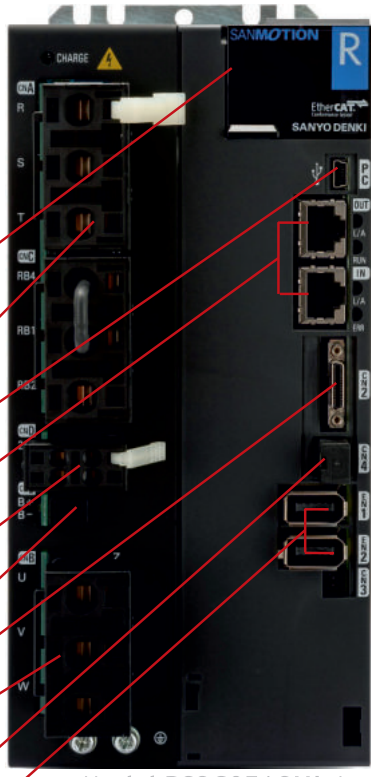

FIVE DIGIT DISPLAY: It allows to monitor amplifier and EtherCAT Network.

POWER CONNECTION: 400 VAC, three-phase. Built-in protection circuits against overload and input overvoltage.

PC CONNECTOR: The amplifier can be set and monitored by means of Personal Computer USB interface.

EtherCAT INTERFACE CONNECTOR: RJ45 - CAT5e.

CONTROL POWER SUPPLY CONNECTOR 24 VDC.

! POWER SUPPLY MOTOR BRAKE EMBEDDED.

I/O CONNECTOR: 7 inputs and 2 outputs configurable by user.

MOTOR POWER CONNECTOR

! SAFE TORQUE OFF - SIL3 CONNECTOR SIL3 SAFE TORQUE OFF (STO)

! SECOND ENCODER CONNECTOR FOR EXTERNAL LINEAR SCALE TO AVOID BACKLASH

Model RS3C05A2HL4
Dimensions:
(100X235X235)

MAIN FEATURES OF THE 3rd GENERATION

SIL3 SAFE TORQUE OFF (STO)

- Safe Torque Off (STO) function - SIL3 [Performance Level - PL = e]
- Mode of Operation: Homing Mode, Profile Velocity Mode, Profile Position Mode, Profile Torque Mode, Cycle Sync Position Mode, Cycle Sync Velocity Mode, Cycle Sync Torque Mode
- Touch Probe Function
- XML file available
- Speed frequency response of 2.2 kHz [3.3 times that of previous RS1 model!]

TECHNICAL DATA	EtherCAT Control		
MODEL	RS3C05A2HA4	RS3C10A2HA4	RS3C15A2HL4
MAX CURRENT	50 Amp	100 Amp	150 Amp
MOTOR OUTPUT STAGE	IGBT, PWM control, sinusoidal current		
POWER SUPPLY VOLTAGE	Three-phase 380 VAC to 480 VAC (+10%, -15%) 50/60 Hz (± 3 Hz)		
CONTROL POWER SUPPLY	24VDC +/- 10%		
DIMENSIONS (mm)	100x235x235	175x235x235	220x375x217
MASS (kg)	4.7	8.5	11.0

SANMOTION AC SERVO SYSTEMS RS3C | 400 VAC | SIL3 SAFE TORQUE OFF (STO) | EtherCAT®

"RS3C" SERIES AC SERVOAMPLIFIERS:
EtherCAT VERSION OUTLINE DRAWINGS

RS3C05A2HA4

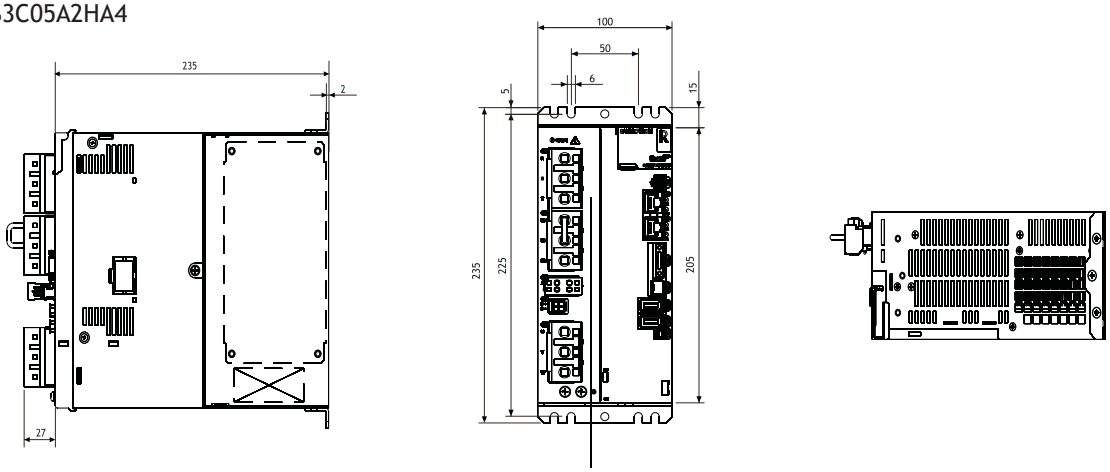

RS3C10A2HL4

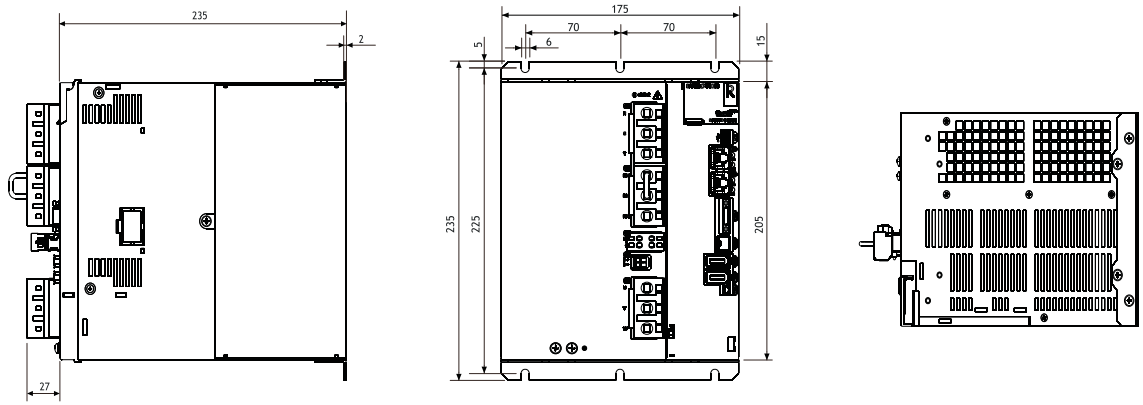

RS3C15A2HL4

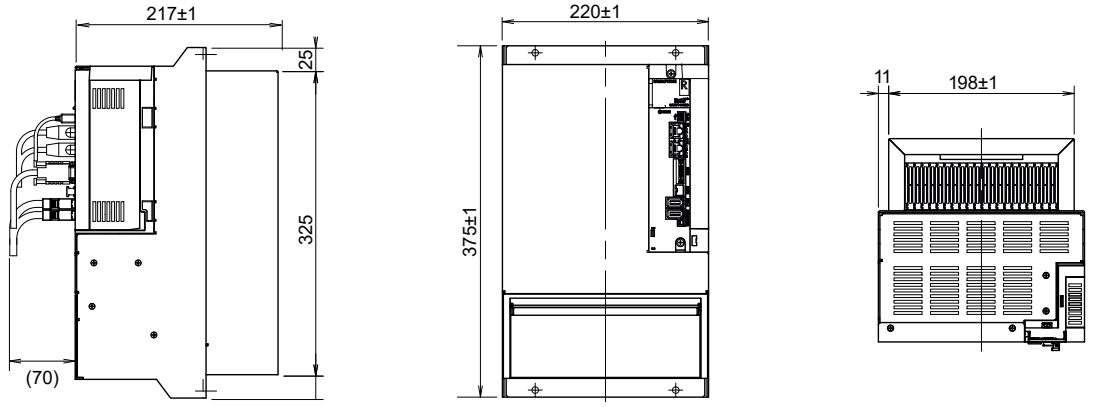

Dimensions mm.

SANMOTION AC SERVO SYSTEMS RS3 | 400 VAC | SIL3 SAFE TORQUE OFF (STO) | PULSE TRAIN ANALOG INPUT | 3rd GENERATION!

400 VAC SERVOAMPLIFIERS

RS3C SERIES AC SERVOAMPLIFIERS

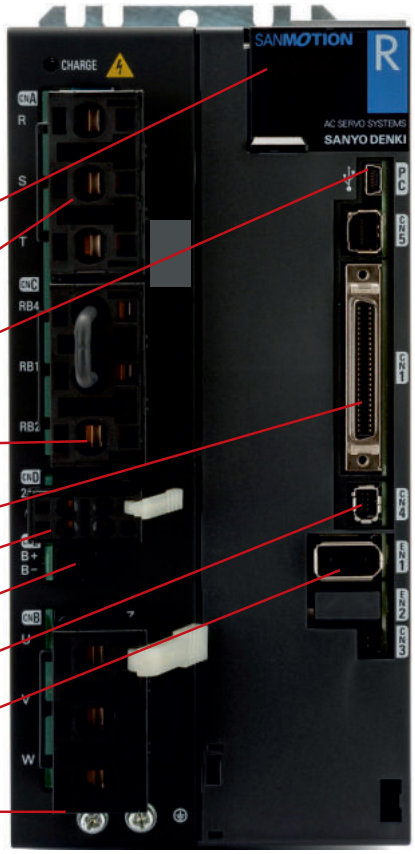

SEVEN DIGIT DISPLAY AND OPERATION KEY: It allows to view and modify parameters and monitor in real time the behaviour of the system.

POWER CONNECTION: 400 VAC, three-phase. Built-in protection circuits against overload and input overvoltage.

! PC CONNECTOR: The amplifier can be set and monitored by means of USB interface.

CONNECTION for external regenerative resistor (optional).

I/O CONNECTOR: Control pulse train (clock + direction; forward + backward pulse; 90° phase shift) or analog signal (proportional to speed or torque). 8 inputs and 8 outputs configurable by user.

CONTROL POWER SUPPLY CONNECTOR 24 VDC.

! POWER SUPPLY MOTOR BRAKE EMBEDDED.

SAFE TORQUE OFF - SIL3 CONNECTOR SIL3 SAFE TORQUE OFF (STO)

ENCODER CONNECTOR

MOTOR POWER CONNECTION

MAIN FEATURES OF THE 3rd GENERATION

- Safe Torque Off (STO) function - SIL3/IEC61508 Performance Level - PL = e/ISO13849-1
- Speed frequency response of 2.2 kHz [3.3 times that of previous RS1 model!]

Model RS3C05A0AA2
Dimensions:
(100X235X235)

SIL3 SAFE TORQUE OFF (STO)

c UL us

TECHNICAL DATA	Position, Velocity, Torque (Control Mode Switching available)		
MODEL	RS3C05A0AA2	RS3C10A0AA2	RS3C15A0AL2
MAX CURRENT	50 Amp	100 Amp	150 Amp
MOTOR OUTPUT STAGE	IGBT, PWM control, sinusoidal current		
POWER SUPPLY VOLTAGE	Three-phase 380 VAC to 480 VAC (+10%, -15%) 50/60 Hz (± 3 Hz)		
CONTROL POWER SUPPLY	24VDC +/- 10%		
DIMENSIONS (mm)	100x235x235	175x235x235	220x375x217
MASS (kg)	4.7	8.5	11.0

SANMOTION AC SERVO SYSTEMS RS3 | 400 VAC | SIL3 SAFE TORQUE OFF (STO) | PULSE TRAIN ANALOG INPUT

RS3C SERIES AC SERVOAMPLIFIERS

PULSE TRAIN AND ANALOG INPUT VERSION OUTLINE DRAWINGS

RS3C05A0AA2

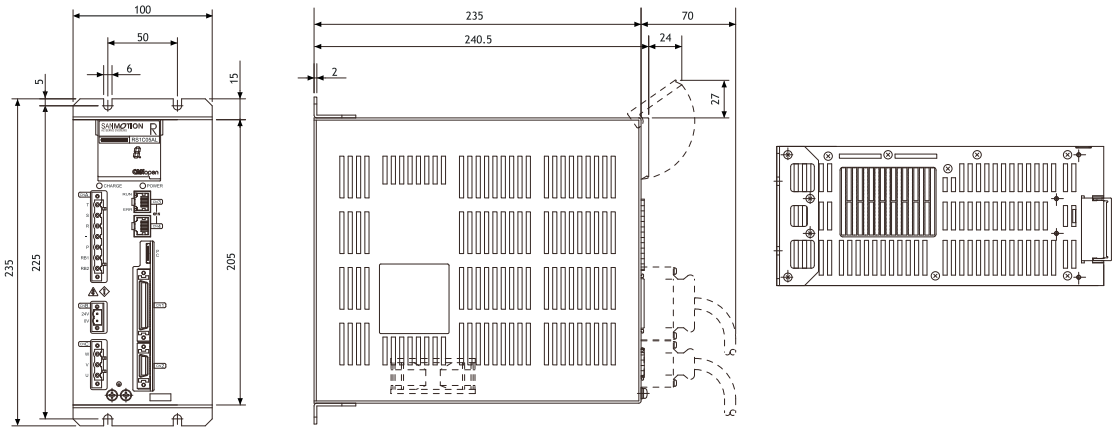

RS3C10A0AA2

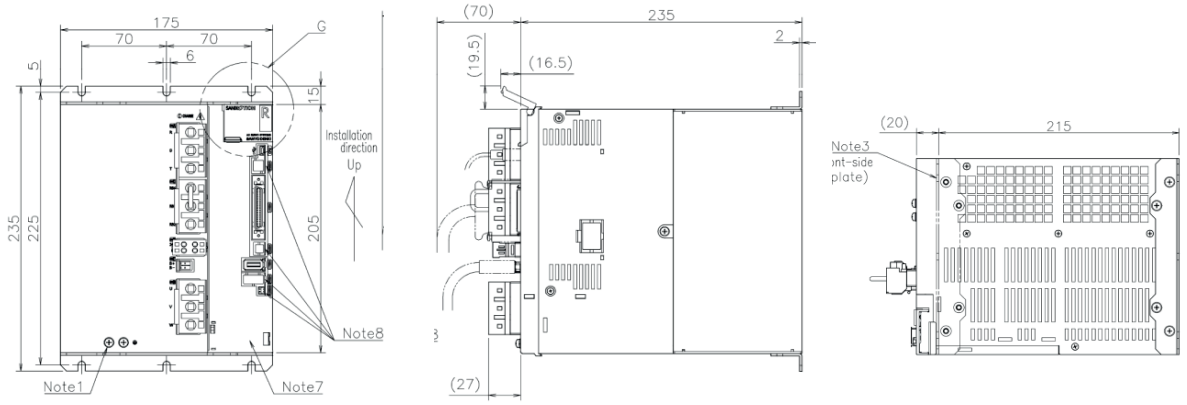

RS3C15A0AL2

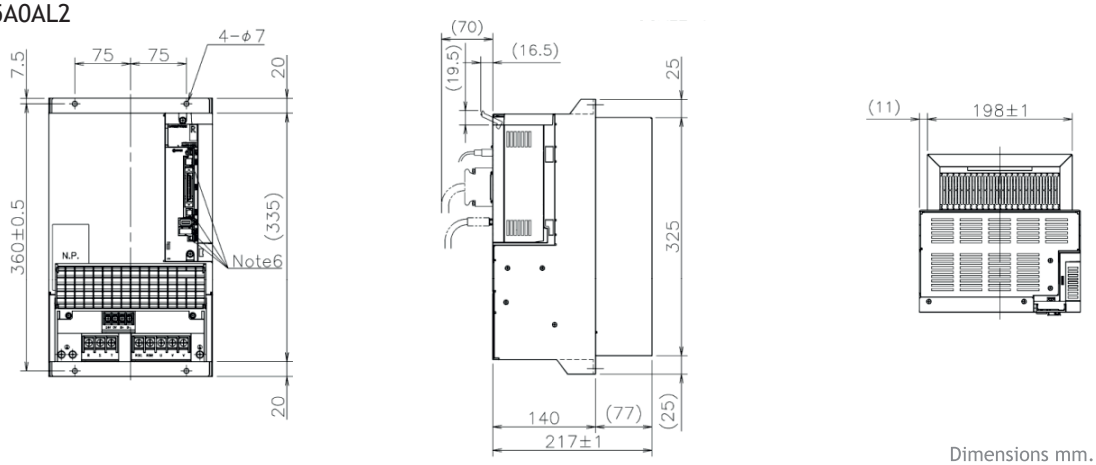

Dimensions mm.

SERVO SYSTEMS

48 VDC SERVOMOTORS - INCREMENTAL ENCODER

For cable options please see the table at the end of the section.

R2GD04005FXH1CM

SANYO DENKI
SANMOTION

Dimensions (Unit:mm)

48 VDC

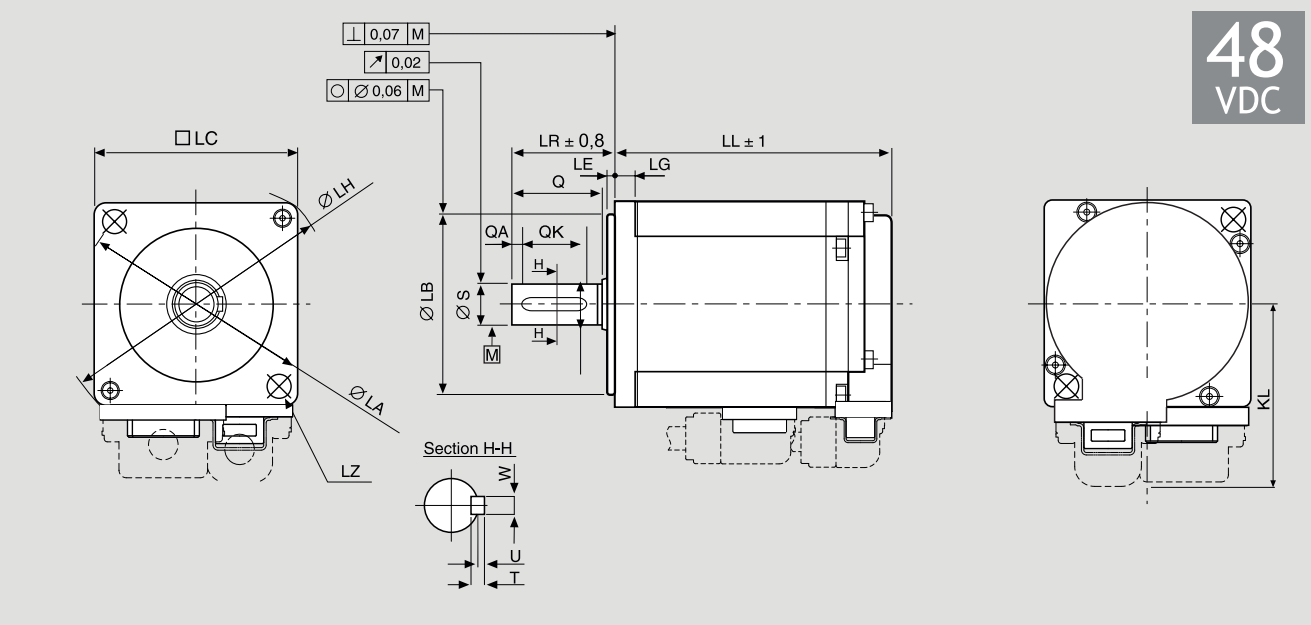

without brake LL	with brake LL	LG	KL	LA	LB	LE	LH	LC	LZ	LR	S	Q	QA	QK	W	T	U	QE	LT
56.5	--	5	35.4	46	0 30-0.021	2.5	56	40	2-Ø4.5	25	0 8-0.009	20	2	12	3	3	1.2	--	--

FEATURES

MODEL		R2GD04005FXH1CM
NOMINAL POWER	(W)	50
NOMINAL SPEED	(rpm)	3000
MAXIMUM SPEED	(rpm)	6000
NOMINAL TORQUE	(Nm)	0.159
STALL TORQUE	(Nm)	0.167
MAXIMUM TORQUE	(Nm)	0.54
INERTIA	($Kg*m^2$)	$0.0376*10^{-4}$
INCREMENTAL ENCODER	(imp./rev)	131072 (17 bit)
PROTECTION DEGREE		IP 67 *
WEIGHT	(Kg)	0.27

TORQUE CURVE

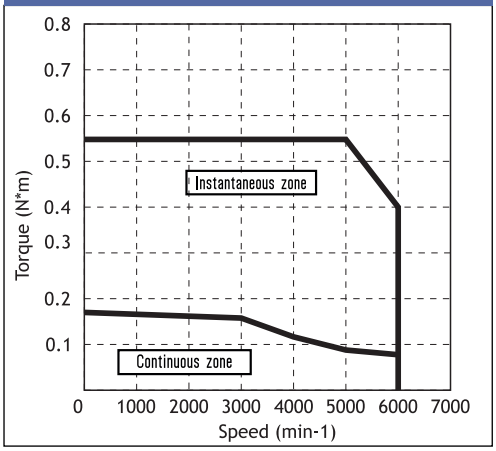

* Protection degree IP67 (except for the shaft hole and the edge of the cable).

Indicated performances refer to motor controlled by related 48 VDC step-d r and EtherCAT servo-amplifiers.

Suggested amplifiers: RFG21A0A00, RF2K24A0HL5, RS2K04A2HL5

R2GD06010DXH11M

SANYO DENKI
SANMOTION

Dimensions (Unit:mm)

48 VDC

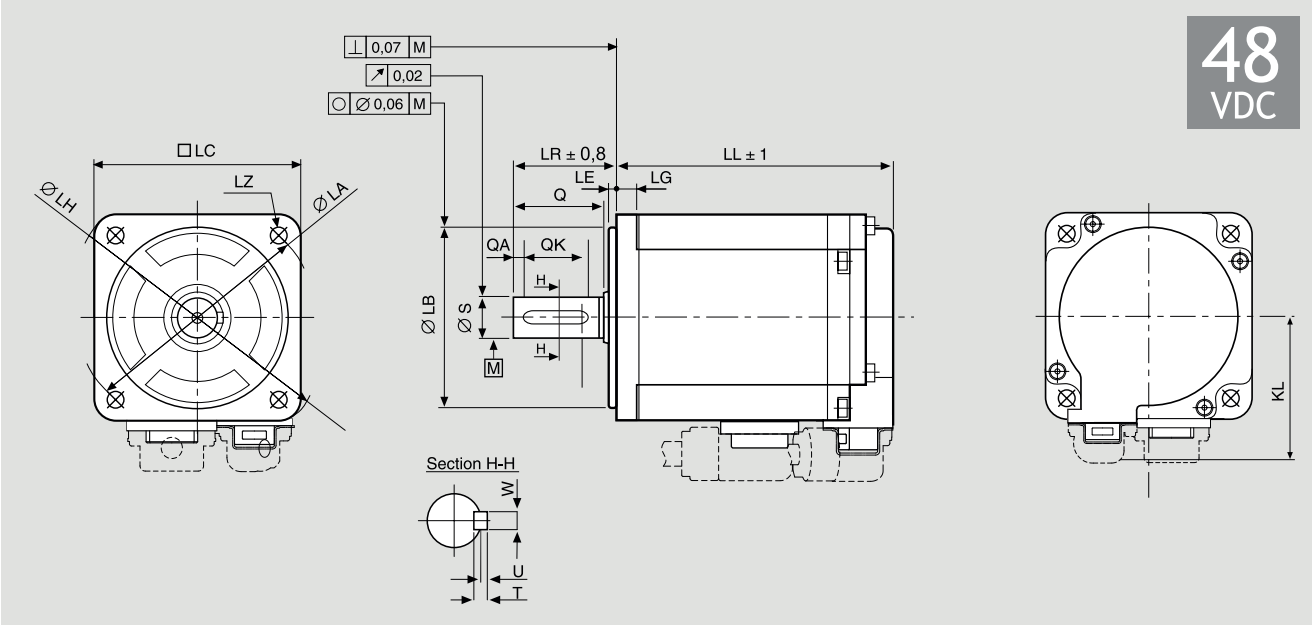

without brake LL	with brake LL	LG	KL	LA	LB	LE	LH	LC	LZ	LR	S	Q	QA	QK	W	T	U	QE	LT
58.5	–	6	44.6	70	0 50-0.025	3.0	82	60	4-Ø5.5	25	0 8-0.009	20	2	12	3	3	1,2	–	–

FEATURES

MODEL		R2GD06010DXH11M
NOMINAL POWER	(W)	100
NOMINAL SPEED	(rpm)	3000
MAXIMUM SPEED	(rpm)	5000
NOMINAL TORQUE	(Nm)	0.318
STALL TORQUE	(Nm)	0.353
MAXIMUM TORQUE	(Nm)	0.84
INERTIA	($Kg*m^2$)	$0.117*10^{-4}$
ENCODER	(imp./rev)	131072 (17 bit)
PROTECTION DEGREE		IP67
WEIGHT	(Kg)	0.59

* Protection degree IP67 (except for the shaft hole and the edge of the cable).

TORQUE CURVE

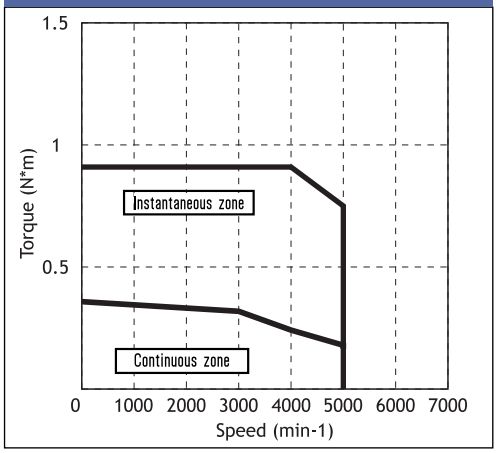

Indicated performances refer to motor controlled by related 48 VDC step-dir and EtherCAT servo-amplifiers.

Suggested amplifiers: RF2G21A0A00, RF2K24A0HL5, RS2K04A2HL5

R2GD06020DXH11M

SANYO DENKI
SANMOTION

Dimensions (Unit:mm)

48 VDC

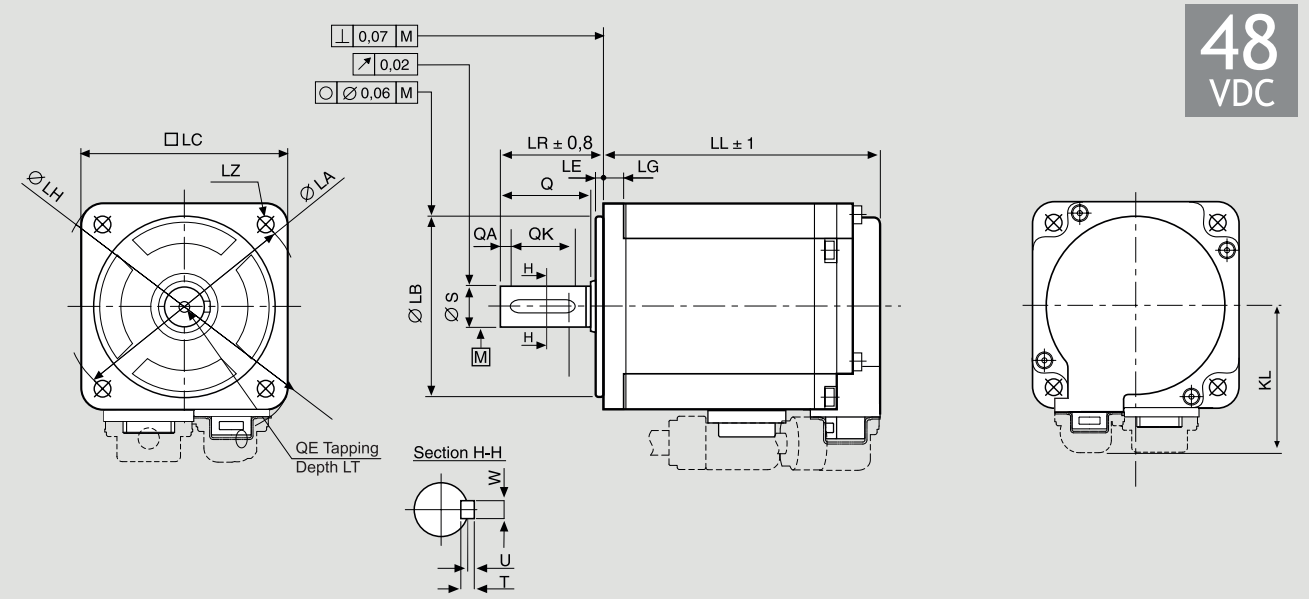

without brake LL	with brake LL	LG	KL	LA	LB	LE	LH	LC	LZ	LR	S	Q	QA	QK	W	T	U	QE	LT
69.5	–	6	44.6	70	0 50-0.025	3.0	82	60	4-Ø5.5	30	0 14-0.011	25	2	20	5	5	2	M5	12

FEATURES

MODEL		R2GD06020DXH11M
NOMINAL POWER	(W)	200
NOMINAL SPEED	(rpm)	3000
MAXIMUM SPEED	(rpm)	4500
NOMINAL TORQUE	(Nm)	0.637
STALL TORQUE	(Nm)	0.637
MAXIMUM TORQUE	(Nm)	1.5
INERTIA	($Kg*m^2$)	$0.219*10^{-4}$
ENCODER	(imp./rev)	131072 (17 bit)
PROTECTION DEGREE		IP67
WEIGHT	(Kg)	0.84

* Protection degree IP67 (except for the shaft hole and the edge of the cable).

TORQUE CURVE

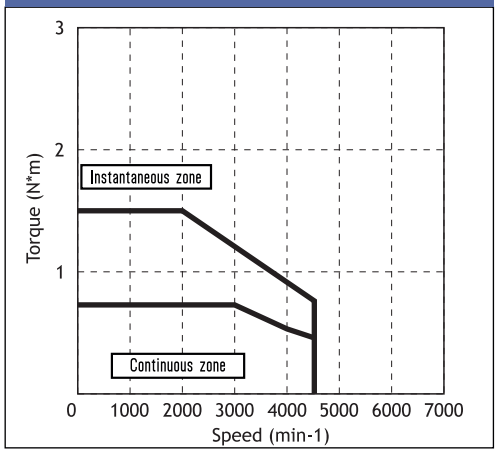

Indicated performances refer to motor controlled by related 48 VDC step-dir and EtherCAT servo-amplifiers.

Suggested amplifiers: RF2G21A0A00, RF2K24A0HL5, RS2K04A2HL5

SERVO SYSTEMS

230 VAC SERVOMOTORS
BATTERY LESS MULT-TURN ABSOLUTE ENCODER

- For cable options please see the table at the end of the section.

R2AA04010FXR1CM (R2AA04010FCR1CM6)

SANYO DENKI
SANMOTION

Dimensions (Unit:mm)

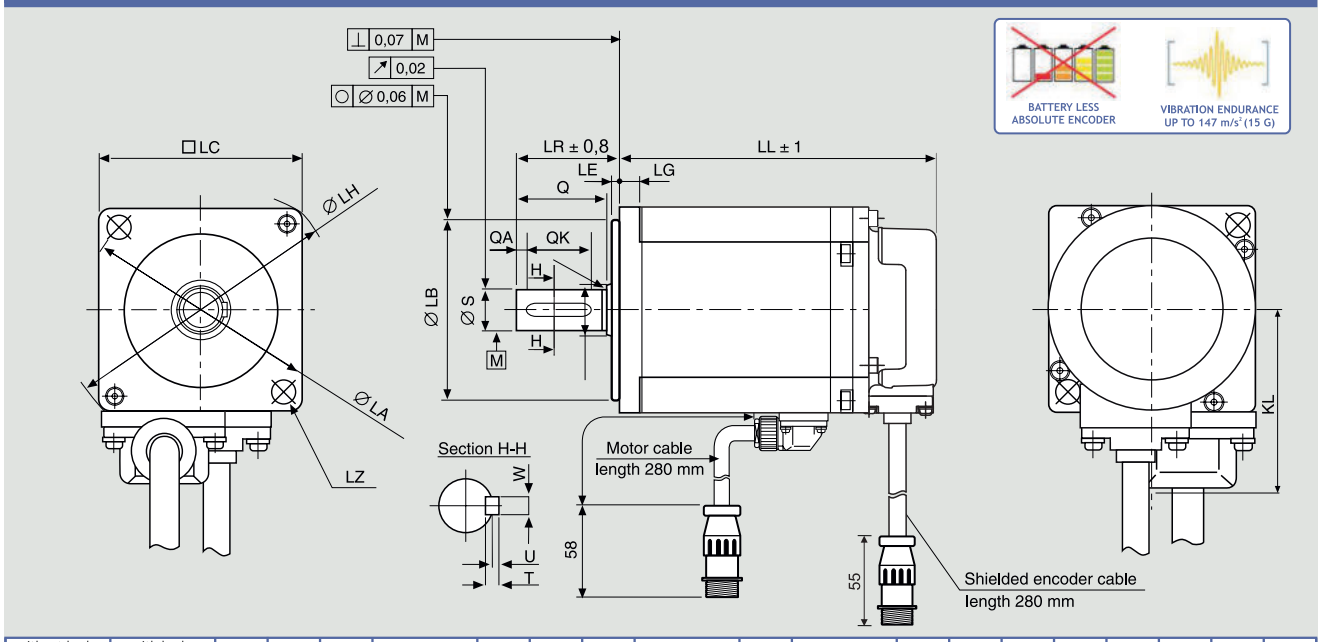

without brake LL	with brake LL	LG	KL	LA	LB	LE	LH	LC	LZ	LR	S	Q	QA	QK	W	T	U	QE	LT
83	119	5	34.5	46	0 30-0.021	2.5	56	40	2-Ø4.5	25	0 8-0.009	20	2	12	3	3	1.2	--	--

FEATURES

MODEL	R2AA04010FXR1CM
NOMINAL POWER [version with brake] (W)	100 [90]
NOMINAL SPEED (rpm)	3000
MAXIMUM SPEED (rpm)	6000
NOMINAL TORQUE (Nm)	0.286
STALL TORQUE (Nm)	0.318
MAXIMUM TORQUE (Nm)	1.18
INERTIA (Kg*m²)	0.0627×10^{-4}
BATTERY LESS ABSOLUTE ENCODER	SINGLE TURN: 131072 imp/rev (17 bit) MULTI TURN: 65536 turns
PROTECTION DEGREE	IP67*
WEIGHT [version with brake] (Kg)	0.53 [0.80]

* Protection degree IP67 (except for the shaft hole and the edge of the cable).

TORQUE CURVE
R2AA04010F [100W] + RS3A03

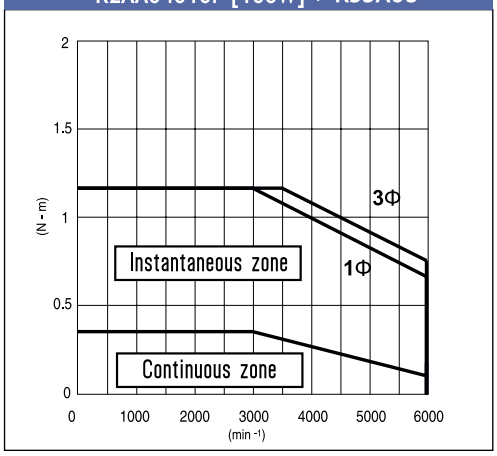

WITHOUT BRAKE
R2AA04010FXR1CM

Indicated performances refer to motor controlled by related new RS3 standard and EtherCat amplifiers.

1Φ torque curve with single phase power supply
3Φ = torque curve with three-phase power supply

Suggested amplifiers: RS3A03A0AL0W00P, RS3A03A2HA4W00P, RS3A03A0AL2

GAM2A4010F0XRK2 [GAM2A4010F0CRK2]

SANYO DENKI
SANMOTION

Dimensions (Unit:mm)

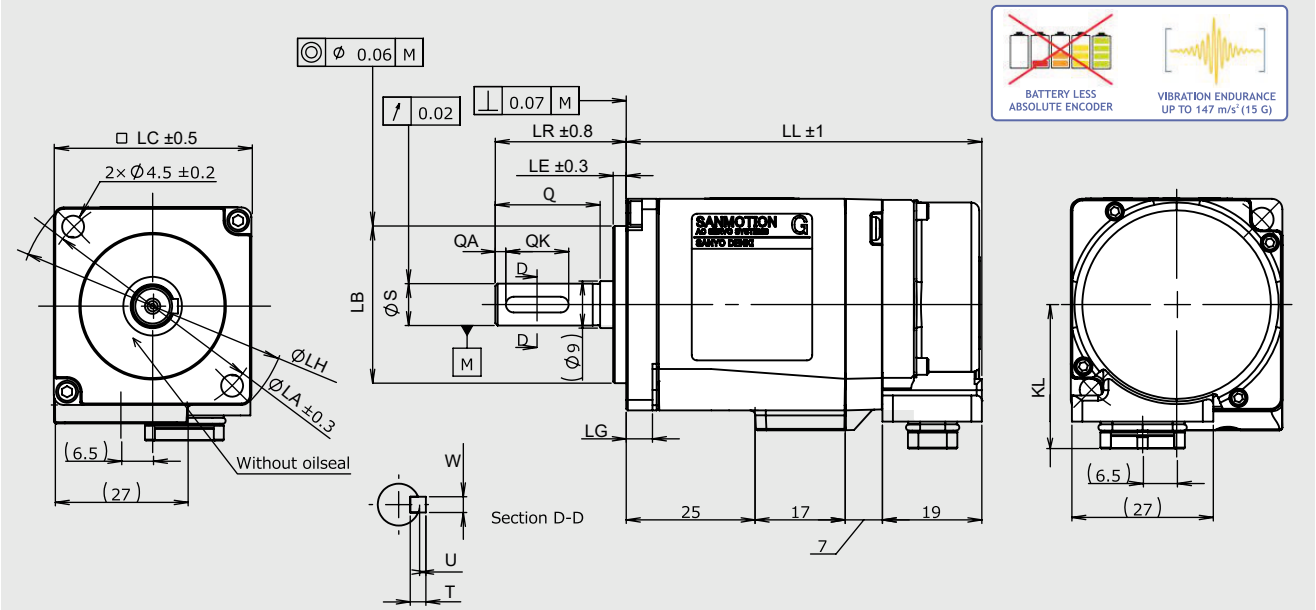

without brake LL	with brake LL	LG	KL	LA	LB	LE	LH	LC	LZ	LR	S	Q	QA	QK	W	T	U	QE	LT
68	100.5	5	27.6	46	30 0 -0.021	2.5	56	40	2-Ø4.5	25	8 0 -0.009	20	2	12	3	3	1.2	--	--

FEATURES

MODEL	GAM2A4010F0XRK2
NOMINAL POWER [version with brake] (W)	100
NOMINAL SPEED (rpm)	3000
MAXIMUM SPEED (rpm)	6500
NOMINAL TORQUE (Nm)	0.318
STALL TORQUE (Nm)	0.318
MAXIMUM TORQUE (Nm)	1.18
INERTIA (Kg*m²)	0.0600×10^{-4}
BATTERY LESS ABSOLUTE ENCODER	SINGLE TURN: (23 bit) MULTI TURN: 65536 turns
PROTECTION DEGREE	IP67*
WEIGHT [version with brake] (Kg)	0.39

* Protection degree IP67 (except for the shaft hole and the edge of the cable).

TORQUE CURVE
GAM2A4010F0XRK2 + GAD amplifier

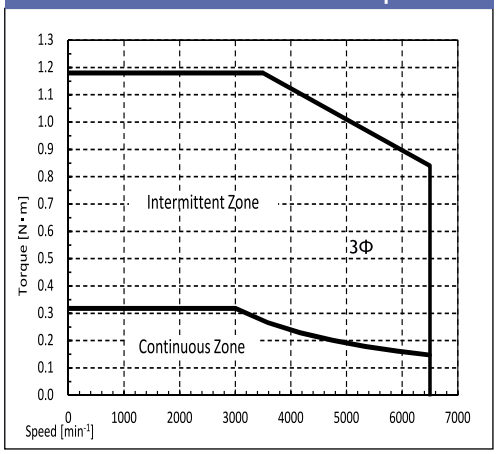

WITHOUT BRAKE
GAM2A4010F0XRK2

Indicated performances refer to motor controlled by related new GAD EtherCAT series amplifiers.

3Φ = torque curve with three-phase power supply

WITH BRAKE
GAM2A4010F0CRK2

Suggested amplifiers: GADSA03AH24

R2AA06020FXR11M (R2AA06020FCR11M)

SANYO DENKI
SANMOTION

Dimensions (Unit:mm)

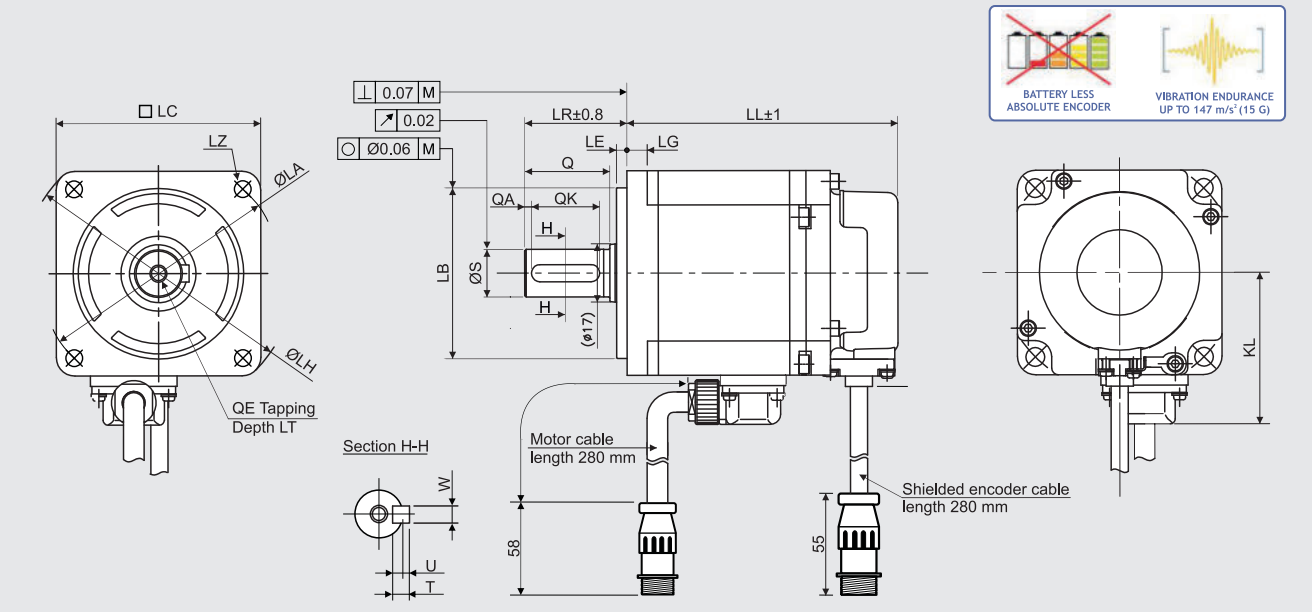

without brake LL	with brake LL	LG	KL	LA	LB	LE	LH	LC	LZ	LR	S	Q	QA	QK	W	T	U	QE	LT
79.5	107.5	6	44.4	70	0 50-0.025	3.0	82	60	4-Ø5.5	30	0 14-0.011	25	2	20	5	5	2	M5	12

FEATURES

MODEL		R2AA06020FXR11M
NOMINAL POWER	(W)	200
NOMINAL SPEED	(rpm)	3000
MAXIMUM SPEED	(rpm)	6000
NOMINAL TORQUE	(Nm)	0.637
STALL TORQUE	(Nm)	0.686
MAXIMUM TORQUE	(Nm)	2.20
INERTIA	($Kg*m^2$)	0.219×10^{-4}
BATTERY LESS ABSOLUTE ENCODER		SINGLE TURN: 131072 imp/rev (17 bit) MULTI TURN: 65536 turns
PROTECTION DEGREE		IP67*
WEIGHT [version with brake]	(Kg)	0.99 [1.4]

* Protection degree IP67 (except for the shaft hole and the edge of the cable).

TORQUE CURVE
R2AA06020F [200W] + RS3A03

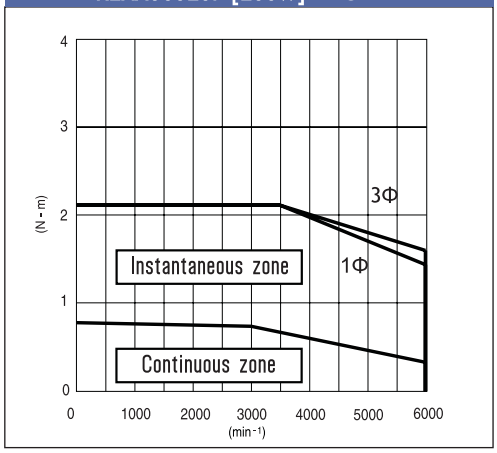

WITHOUT BRAKE
R2AA06020FXR11M

Indicated performances refer to motor controlled by related new RS3 standard and EtherCat amplifiers.

1Φ torque curve with single phase power supply
3Φ = torque curve with three-phase power supply

WITH BRAKE
R2AA06020FCR11M

Suggested amplifiers: RS3A03A0AL0W00P, RS3A03A2HA4W00P, RS3A03A0AL2

GAM2A6020F0XRK2 [GAM2A6020F0CRK2] SANYO DENKI SANMOTION

Dimensions (Unit:mm)

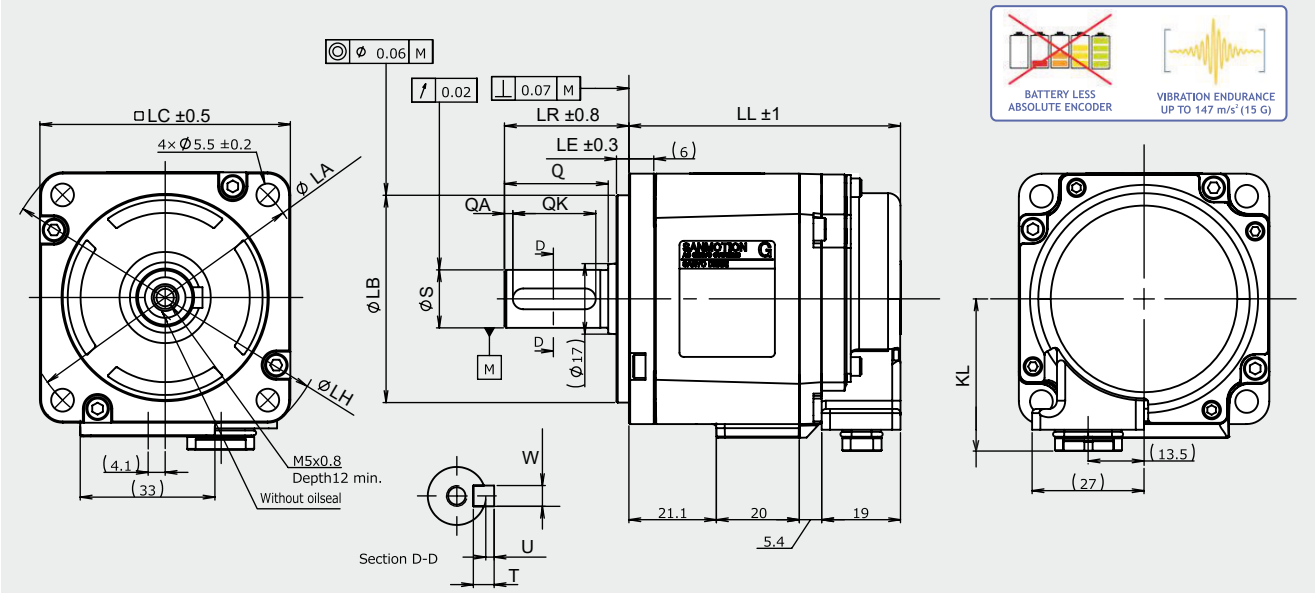

without brake LL	with brake LL	LG	KL	LA	LB	LE	LH	LC	LZ	LR	S	Q	QA	QK	W	T	U	QE	LT
65.5	91.5	6	36.8	70	0 50-0.025	3.0	81	60	--	30	0 14-0.011	25	2	20	5	5	2	--	--

FEATURES

MODEL		GAM2A6020F0XRK2
NOMINAL POWER	(W)	200
NOMINAL SPEED	(rpm)	3000
MAXIMUM SPEED	(rpm)	6500
NOMINAL TORQUE	(Nm)	0.637
STALL TORQUE	(Nm)	0.686
MAXIMUM TORQUE	(Nm)	2.20
INERTIA	($Kg*m^2$)	0.247×10^{-4}
BATTERY LESS ABSOLUTE ENCODER		SINGLE TURN: (23 bit) MULTI TURN: 65536 turns
PROTECTION DEGREE		IP67*
WEIGHT	(Kg)	0.80

* Protection degree IP67 (except for the shaft hole and the edge of the cable).

TORQUE CURVE
GAM2A6020F0XRK2 + GAD amplifier

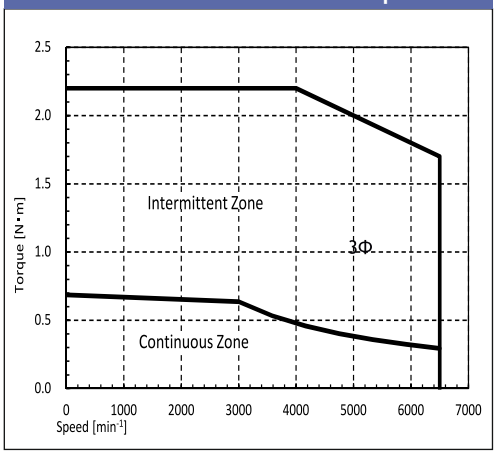

WITHOUT BRAKE
GAM2A6020F0XRK2

Indicated performances refer to motor controlled by related new GAD EtherCAT series amplifiers.

3Φ = torque curve with three-phase power supply

WITH BRAKE
GAM2A6020F0CRK2

Suggested amplifiers: GADSA03AH24

R2AA06040FXR11M (R2AA06040FCR11M6)

SANYO DENKI
SANMOTION

Dimensions (Unit:mm)

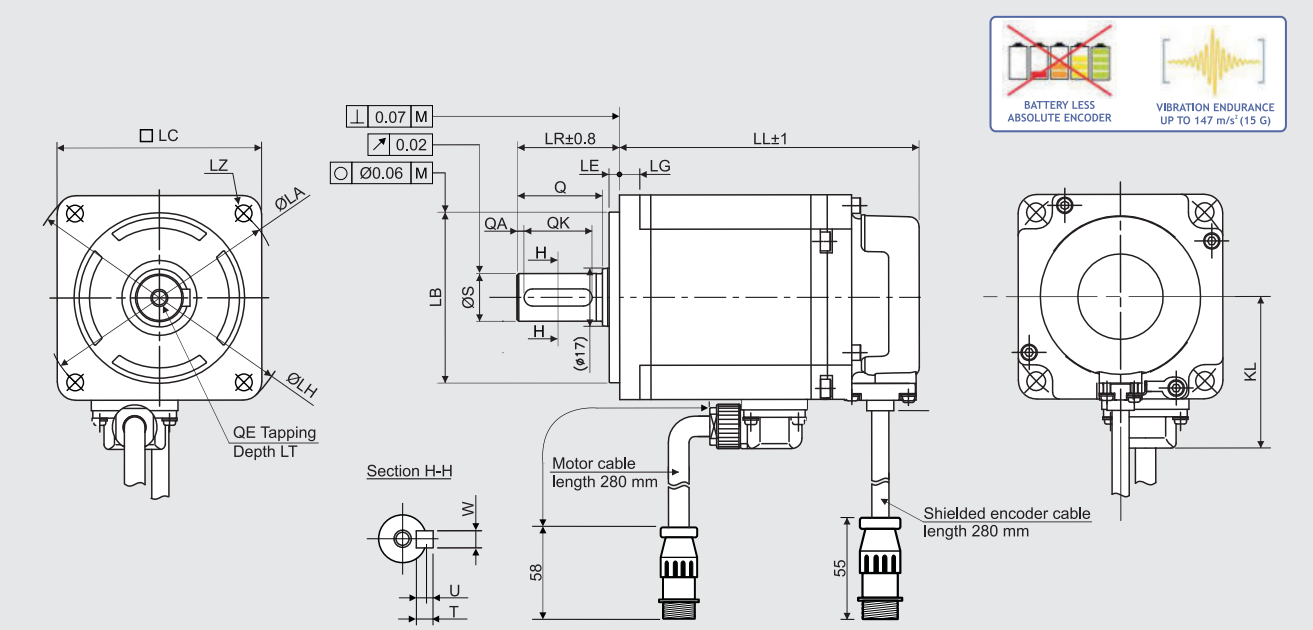

without brake LL	with brake LL	LG	KL	LA	LB	LE	LH	LC	LZ	LR	S	Q	QA	QK	W	T	U	QE	LT
105.5	133.5	6	44.4	70	0 50-0.025	3.0	82	60	4-Ø5.5	30	0 14-0.011	25	2	20	5	5	2	M5	12

FEATURES

MODEL		R2AA06040FXR11M
NOMINAL POWER	(W)	400
NOMINAL SPEED	(rpm)	3000
MAXIMUM SPEED	(rpm)	6000
NOMINAL TORQUE	(Nm)	1.270
STALL TORQUE	(Nm)	1.370
MAXIMUM TORQUE	(Nm)	4.80
INERTIA	($Kg*m^2$)	0.412×10^{-4}
BATTERY LESS ABSOLUTE ENCODER		SINGLE TURN: 131072 imp/rev (17 bit) MULTI TURN: 65536 turns
PROTECTION DEGREE		IP67*
WEIGHT [version with brake]	(Kg)	1.50 [1.90]

* Protection degree IP67 (except for the shaft hole and the edge of the cable).

TORQUE CURVE
R2AA06040F [400W] +RS3A03

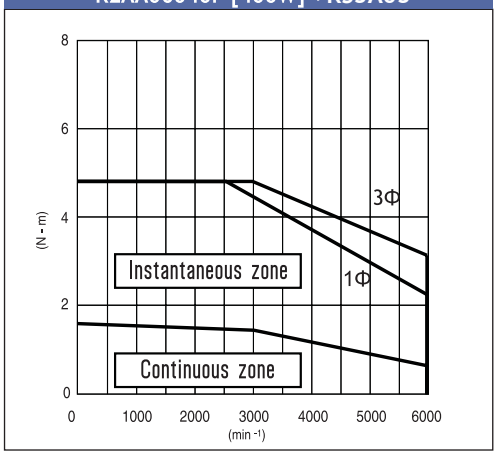

WITHOUT BRAKE
R2AA06040FXR11M

Indicated performances refer to motor controlled by related new RS3 standard and EtherCat amplifiers.

1Φ torque curve with single phase power supply
3Φ = torque curve with three-phase power supply

WITH BRAKE
R2AA06040FCR11M6

Suggested amplifiers: RS3A03A0AL0W00P, RS3A03A2HA4W00P, RS3A03A0AL2

GAM2A6040F0XRK2 [GAM2A6040F0CRK2] SANYO DENKI SANMOTION

Dimensions (Unit:mm)

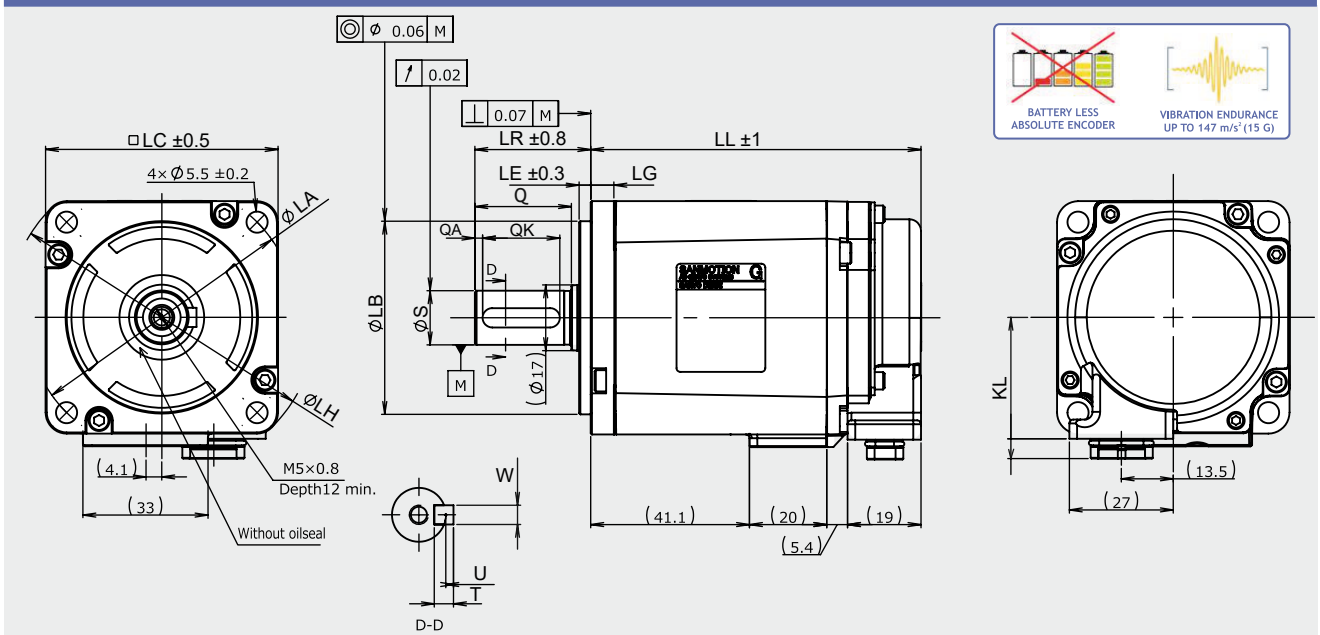

without brake LL	with brake LL	LG	KL	LA	LB	LE	LH	LC	LZ	LR	S	Q	QA	QK	W	T	U	QE	LT
85.5	111.5	6	36.8	70	0 50-0.025	3.0	81	60	--	30	0 14-0.011	25	2	20	5	5	2	--	--

FEATURES

MODEL		GAM2A6040F0XRK2 [GAM2A6040F0CRK2]
NOMINAL POWER	(W)	400
NOMINAL SPEED	(rpm)	3000
MAXIMUM SPEED	(rpm)	6500
NOMINAL TORQUE	(Nm)	1.270
STALL TORQUE	(Nm)	1.370
MAXIMUM TORQUE	(Nm)	4.80
INERTIA	($Kg*m^2$)	0.460×10^{-4} [0.534×10^{-4}]
BATTERY LESS ABSOLUTE ENCODER		SINGLE TURN: (23 bit) MULTI TURN: 65536 turns
PROTECTION DEGREE		IP67*
WEIGHT [version with brake]	(Kg)	1.2 [1.6]

* Protection degree IP67 (except for the shaft hole and the edge of the cable).

TORQUE CURVE
GAM2A6040F0XRK2 + GAD amplifier

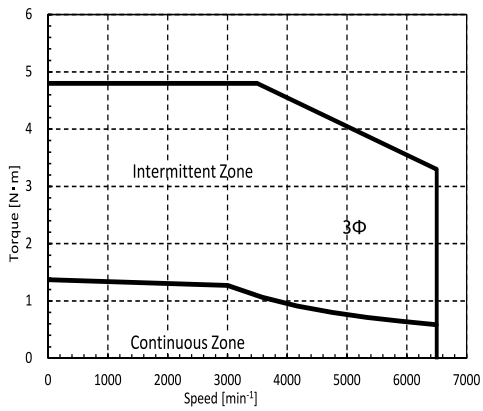

WITHOUT BRAKE
GAM2A6040F0XRK2

Indicated performances refer to motor controlled by related new GAD EtherCAT series amplifiers.

3Φ = torque curve with three-phase power supply

WITH BRAKE
GAM2A6040F0CRK2

Suggested amplifiers: GADSA03AH24

R2AA08075FXR11M (R2AA08075FCR11M)

SANYO DENKI
SANMOTION

Dimensions (Unit:mm)

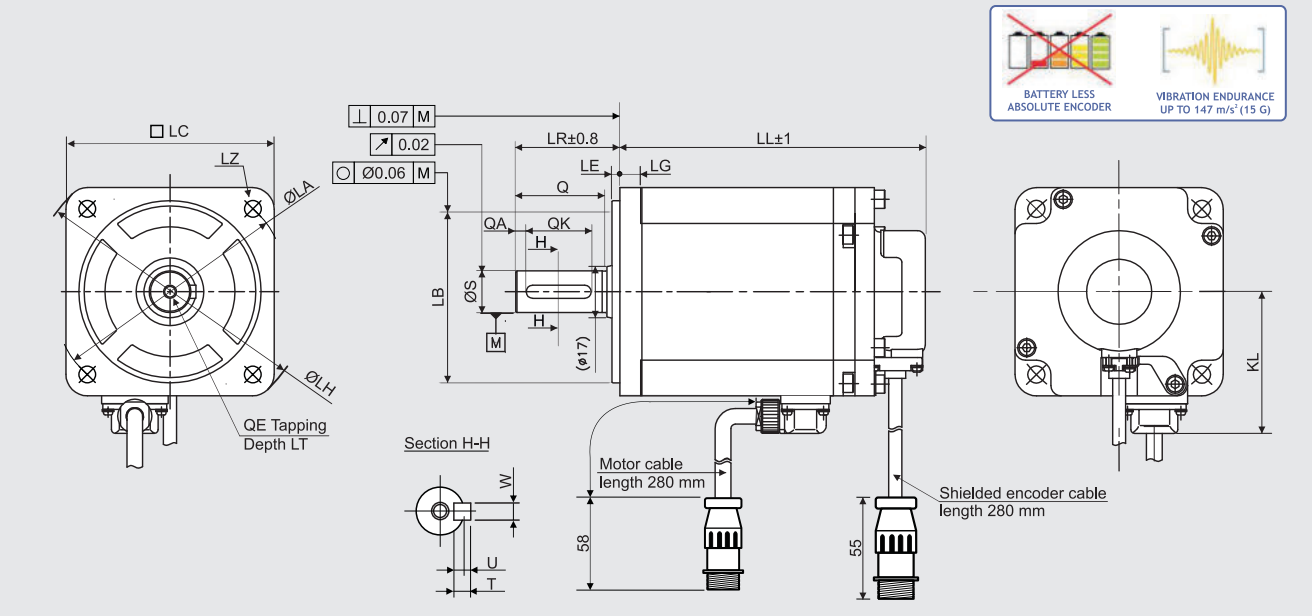

without brake LL	with brake LL	LG	KL	LA	LB	LE	LH	LC	LZ	LR	S	Q	QA	QK	W	T	U	QE	LT
117.3	153	8	54.4	90	0 70-0.030	3.0	108	80	4-Ø6.6	40	0 16-0.011	35	4	25	5	5	2	M5	12

FEATURES

MODEL		R2AA08075FXR11M
NOMINAL POWER	(W)	750
NOMINAL SPEED	(rpm)	3000
MAXIMUM SPEED	(rpm)	6000
NOMINAL TORQUE	(Nm)	2.390
STALL TORQUE	(Nm)	2.550
MAXIMUM TORQUE	(Nm)	8.50
INERTIA	($Kg*m^2$)	1.820×10^{-4}
BATTERY LESS ABSOLUTE ENCODER		SINGLE TURN: 131072 imp/rev (17 bit) MULTI TURN: 65536 turns
PROTECTION DEGREE		IP67*
WEIGHT [version with brake]	(Kg)	2.80 [3.70]

* Protection degree IP67 (except for the shaft hole and the edge of the cable).

TORQUE CURVE
R2AA08075F [750W] + RS3A03

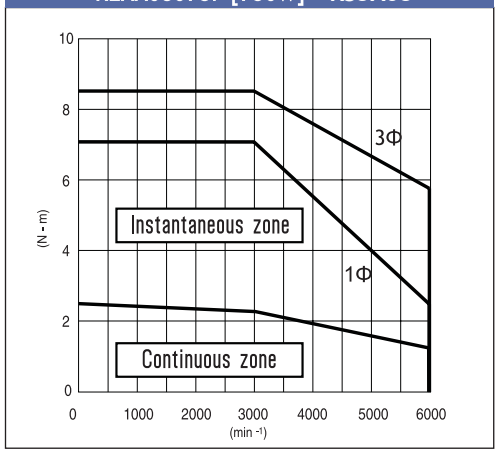

WITHOUT BRAKE
R2AA08075FXR11M

Indicated performances refer to motor controlled by related new RS3 standard and EtherCat amplifiers.

1Φ torque curve with single phase power supply
3Φ = torque curve with three-phase power supply

WITH BRAKE
R2AA08075FCR11M

GAM2A8075V0XRK2 [GAM2A8075V0CRK2] SANYO DENKI SANMOTION

Dimensions (Unit:mm)

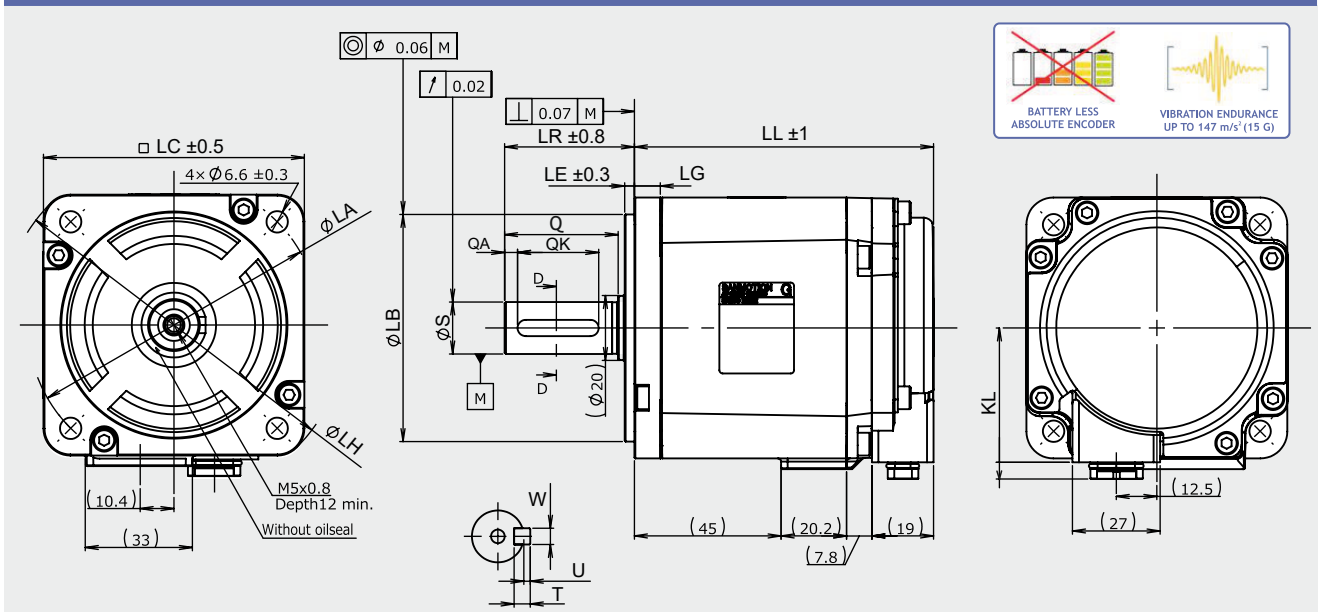

without brake LL	with brake LL	LG	KL	LA	LB	LE	LH	LC	LZ	LR	S	Q	QA	QK	W	T	U	QE	LT
92	126	8	46.6	90	0 70-0.030	3.0	107	80	--	40	0 16-0.011	35	4	25	5	5	2	--	--

FEATURES

MODEL		GAM2A8075V0XRK2 [GAM2A8075V0CRK2]
NOMINAL POWER	(W)	750
NOMINAL SPEED	(rpm)	3000
MAXIMUM SPEED	(rpm)	6500
NOMINAL TORQUE	(Nm)	2.390
STALL TORQUE	(Nm)	2.550
MAXIMUM TORQUE	(Nm)	8.50
INERTIA	($Kg*m^2$)	1.560×10^{-4} [1.760×10^{-4}]
BATTERY LESS ABSOLUTE ENCODER		SINGLE TURN: (23 bit) MULTI TURN: 65536 turns
PROTECTION DEGREE		IP67*
WEIGHT [version with brake]	(Kg)	2.2 [3]

* Protection degree IP67 (except for the shaft hole and the edge of the cable).

TORQUE CURVE
GAM2A8075F0XRK2 + GAD amplifier

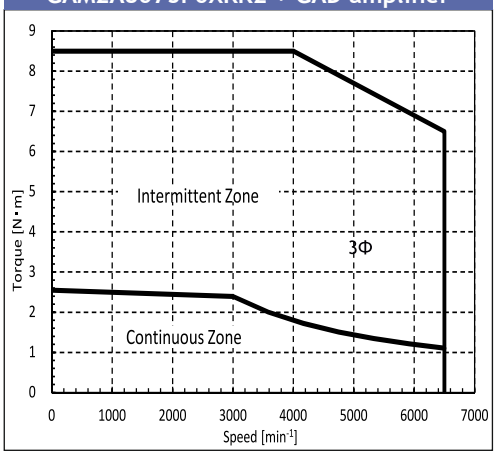

WITHOUT BRAKE
GAM2A8075F0XRK2

Indicated performances refer to motor controlled by related new GAD EtherCAT series amplifiers.

3Φ = torque curve with three-phase power supply

WITH BRAKE
GAM2A8075F0CRK2

Suggested amplifiers: GADSA03AH24

R2AAB8100HXR29M (R2AAB8100HCR29M)

SANYO DENKI
SANMOTION

Dimensions (Unit:mm)

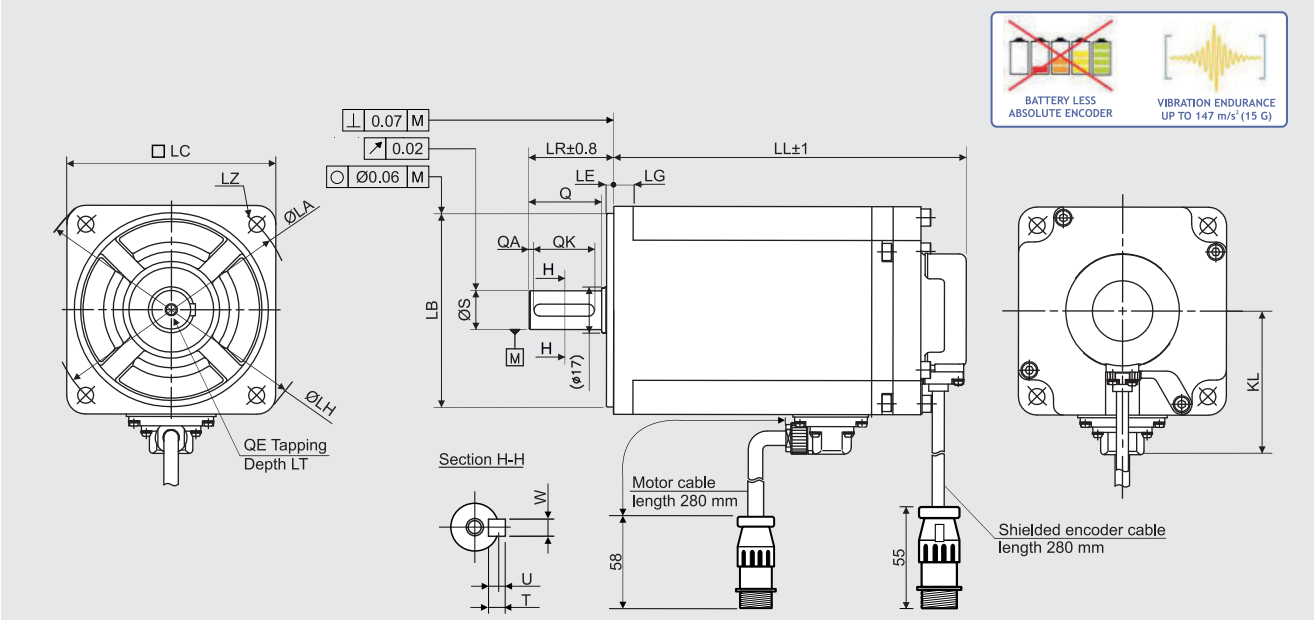

without brake LL	with brake LL	LG	KL	LA	LB	LE	LH	LC	LZ	LR	S	Q	QA	QK	W	T	U	QE	LT
145.8	171.8	8	59.4	100	0 80-0.03	3.0	115.5	86	4-Ø6.6	35	0 16-0.011	30	2	25	5	5	2	M5	12

FEATURES

MODEL		R2AAB8100HXR29M
NOMINAL POWER	(W)	1000
NOMINAL SPEED	(rpm)	3000
MAXIMUM SPEED	(rpm)	3000
NOMINAL TORQUE	(Nm)	3.180
STALL TORQUE	(Nm)	3.920
MAXIMUM TORQUE	(Nm)	11.60
INERTIA	($Kg*m^2$)	2.383×10^{-4}
BATTERY LESS ABSOLUTE ENCODER		SINGLE TURN: 131072 imp/rev (17 bit) MULTI TURN: 65536 turns
PROTECTION DEGREE		IP67*
WEIGHT [version with brake]	(Kg)	3.60 [4.50]

TORQUE CURVE
R2AAB8100H [1kW] + RS3A03

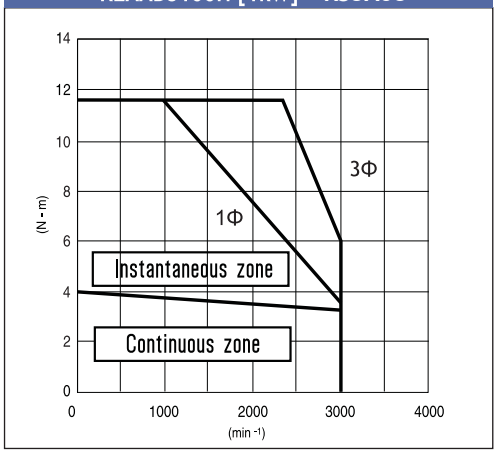

* Protection degree IP67 (except for the shaft hole and the edge of the cable).

WITHOUT BRAKE
R2AAB8100HXR29M

Indicated performances refer to motor controlled by related new RS3 standard and EtherCat amplifiers.

1Φ torque curve with single phase power supply
3Φ = torque curve with three-phase power supply

WITH BRAKE
R2AAB8100HCR29M

GAM2A9100H0XRK2 [GAM2A9100H0CRK3] SANYO DENKI SANMOTION

Dimensions (Unit:mm)

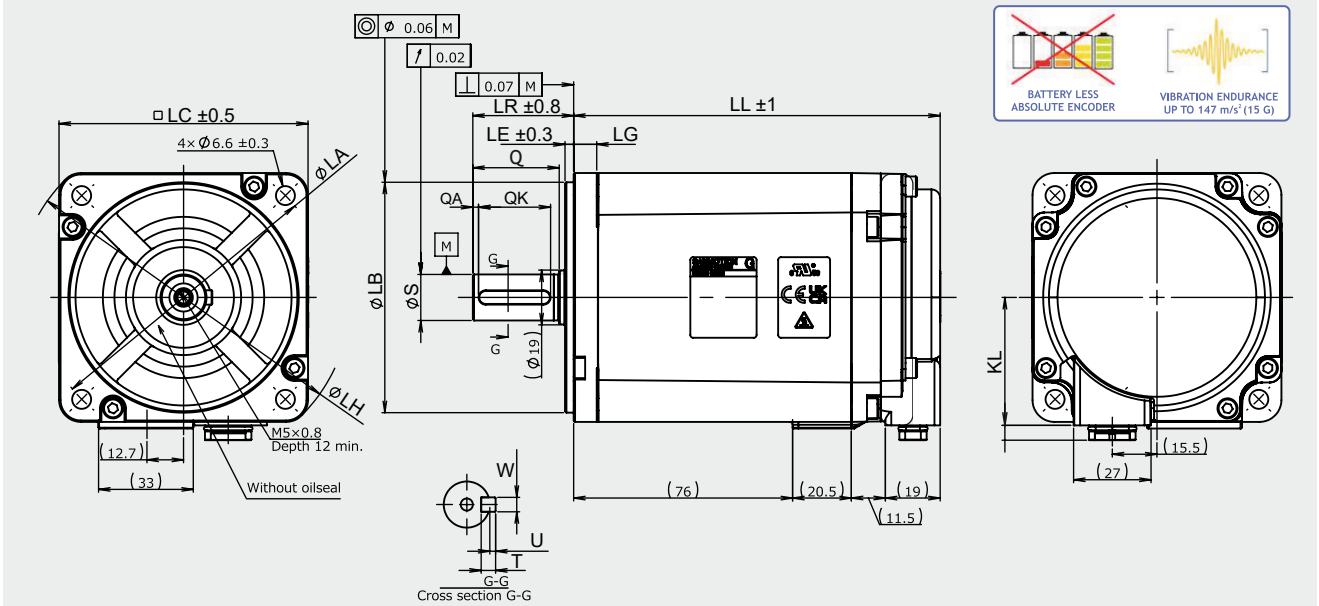

without brake LL	with brake LL	LG	KL	LA	LB	LE	LH	LC	LZ	LR	S	Q	QA	QK	W	T	U	QE	LT
127	153	8	49.6	100	0 80-0.03	3.0	116	86	--	35	0 16-0.011	30	2	25	5	5	2	--	--

FEATURES

MODEL		GAM2A9100H0XRK2
NOMINAL POWER	(W)	1000
NOMINAL SPEED	(rpm)	3000
MAXIMUM SPEED	(rpm)	3000
NOMINAL TORQUE	(Nm)	3.180
STALL TORQUE	(Nm)	3.920
MAXIMUM TORQUE	(Nm)	11.60
INERTIA	($Kg*m^2$)	2.450×10^{-4}
BATTERY LESS ABSOLUTE ENCODER		SINGLE TURN: (23 bit) MULTI TURN: 65536 turns
PROTECTION DEGREE		IP67*
WEIGHT [version with brake]	(Kg)	3.4

* Protection degree IP67 (except for the shaft hole and the edge of the cable).

TORQUE CURVE
GAM2A9100H0XRK2 + GAD amplifier

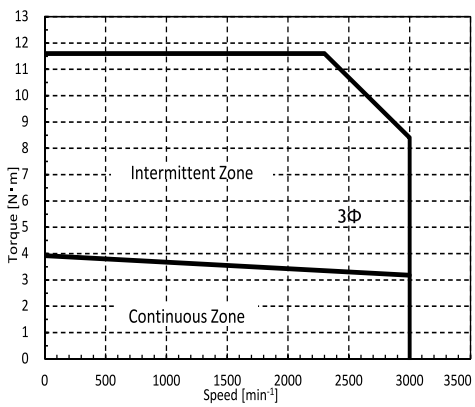

WITHOUT BRAKE
GAM2A9100H0XRK2

Indicated performances refer to motor controlled by related new GAD EtherCAT series amplifiers.

3Φ = torque curve with three-phase power supply

WITH BRAKE
GAM2A9100H0CRK2

Suggested amplifiers: GADSA03AH24

Q2AA10150BXR48M (Q2AA10150BCR48M)

SANYO DENKI
SANMOTION

Dimensions (Unit:mm)

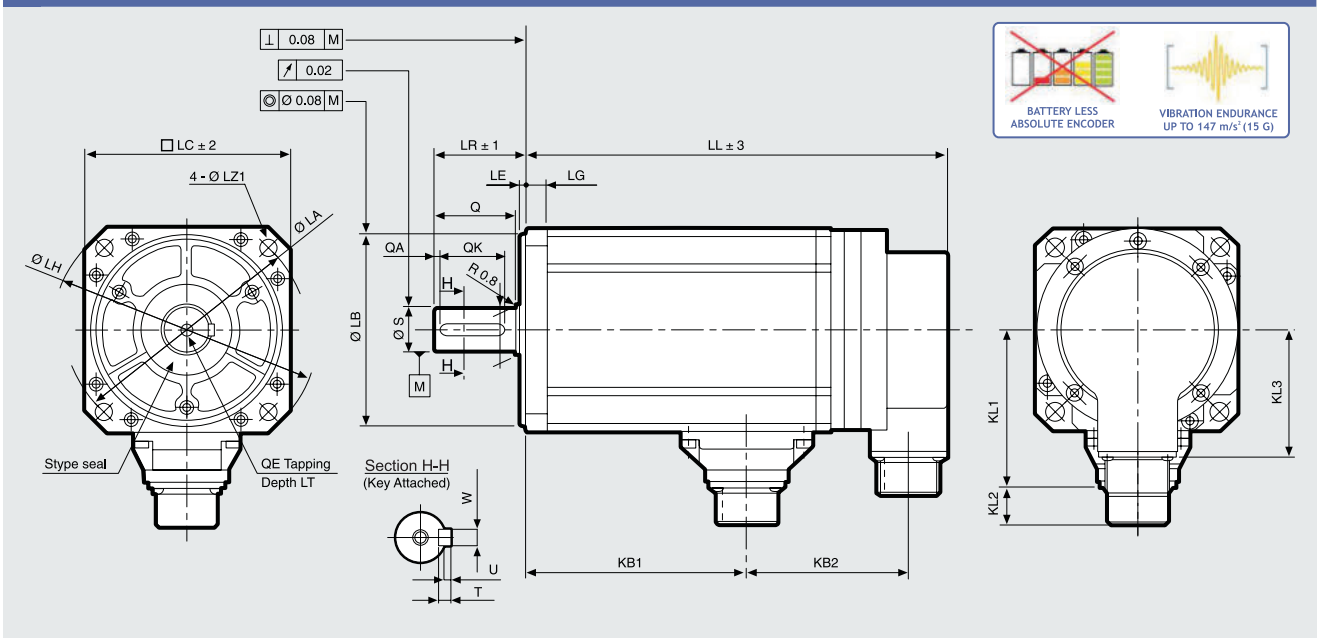

without brake LL	without brake KB2	with brake LL	with brake KB2	KL1	KL2	KL3	LG	LA	LB	LE	LH	LC	LZ1	LZ2	LR	S	Q	QA	QK	W	T	U	KB1	QE	LT
237	88	272,5	124	78	19	64	10	115	0 95-0.035	3	130	100	9	--	45	0 22-0.013	40	3	32	0 6-0.030	6	2.5	128	M6	20

FEATURES

MODEL		Q2AA10150BXR48M
NOMINAL POWER	(W)	1500
NOMINAL SPEED	(rpm)	2000
MAXIMUM SPEED	(rpm)	2000
NOMINAL TORQUE	(Nm)	7.2
STALL TORQUE	(Nm)	7.7
MAXIMUM TORQUE	(Nm)	20.5
INERTIA	($Kg*m^2$)	8.0×10^{-4}
BATTERY LESS ABSOLUTE ENCODER		SINGLE TURN: 131072 imp/rev (17 bit) MULTI TURN: 65536 turns
PROTECTION DEGREE		IP67
WEIGHT [version with brake]	(Kg)	7.0 [8.5]

TORQUE CURVE
Q2AA10150B [1.5kW] + RS3A03

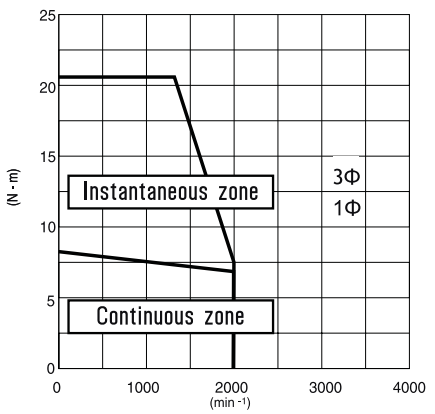

Q2AA10150BXR48M

Indicated performances refer to motor controlled by related new RS3 standard and EtherCat amplifiers.

1Φ = torque curve with single-phase power supply
3Φ = torque curve with three-phase power supply

Q2AA10150BCR48M

Suggested amplifiers: RS3A03A0AL0W00P, RS3A03A2HA4W00P, RS3A03A0AL2

GAM2AA150B0XNB3 [GAM2AA150B0CNB3]

Dimensions (Unit:mm)

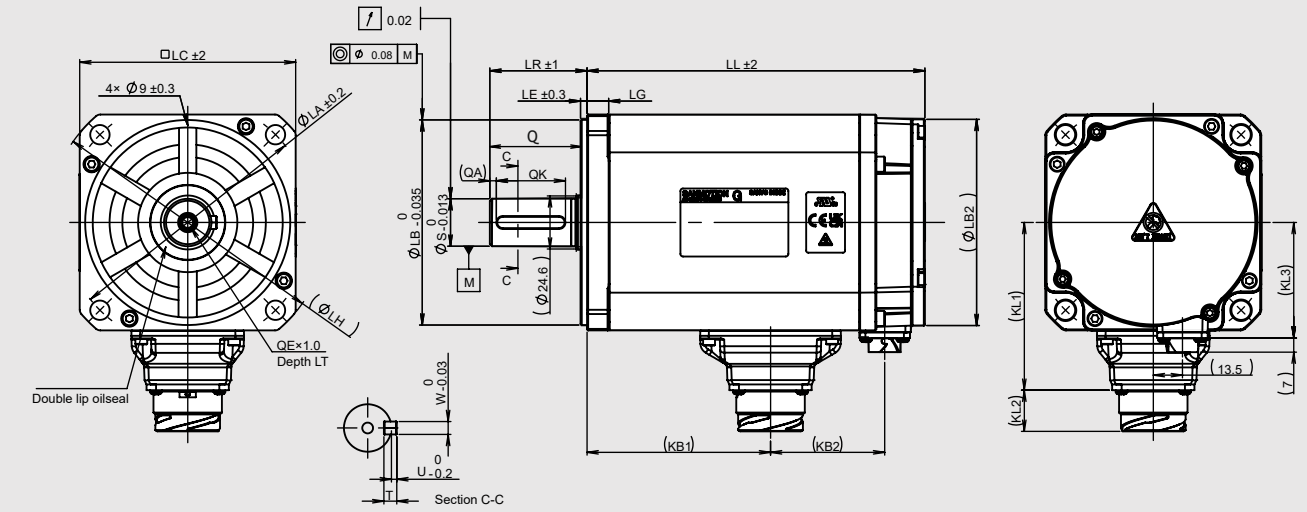

without brake LL	KB2	with brake LL	KB2	KL1	KL2	KL3	LG	LA	LB	LE	LH	LC	LZ1	LB2	LR	S	Q	QA	QK	W	T	U	KB1	QE	LT
161	45	205.5	90	78	19	54	10	115	0 95.5-0.035	3	130	100	9	95.5	45	0 22-0.013	40	3	32	0 6-0.03	6	2.5	97.5	M6	20

FEATURES

MODEL		GAM2AA150B0XNB3 [GAM2AA150B0CNB3]
NOMINAL POWER	(W)	1500
NOMINAL SPEED	(rpm)	2000
MAXIMUM SPEED	(rpm)	2000
NOMINAL TORQUE	(Nm)	7.2
STALL TORQUE	(Nm)	7.7
MAXIMUM TORQUE	(Nm)	20.5
INERTIA	($Kg*m^2$)	$6.10x10^{-4}$ [$6.45x10^{-4}$]
ENCODER	(imp./rev)	SINGLE TURN: 131072 imp/rev (17 bit)
PROTECTION DEGREE		IP67
WEIGHT [version with brake]	(Kg)	5.9 [7.5]

TORQUE CURVE
GAM2AA150B0X[C] + RS3A03

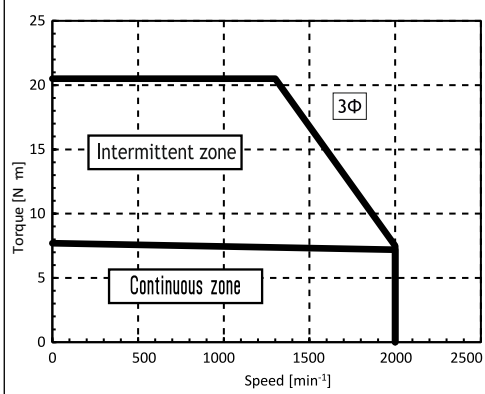

WITHOUT BRAKE
GAM2AA10150B0XNB3

Indicated performances refer to motor controlled by related new RS3 standard and EtherCat amplifiers.

1Φ torque curve with single phase power supply
3Φ = torque curve with three-phase power supply

WITH BRAKE
GAM2AA10150B0CNB3

Suggested amplifiers: RS3A03A2HA4W00, RS3A03A0AA2, RS3A03A2HAE

GAM2AA150B0XRB3 [GAM2AA150B0CRB3]

Dimensions (Unit:mm)

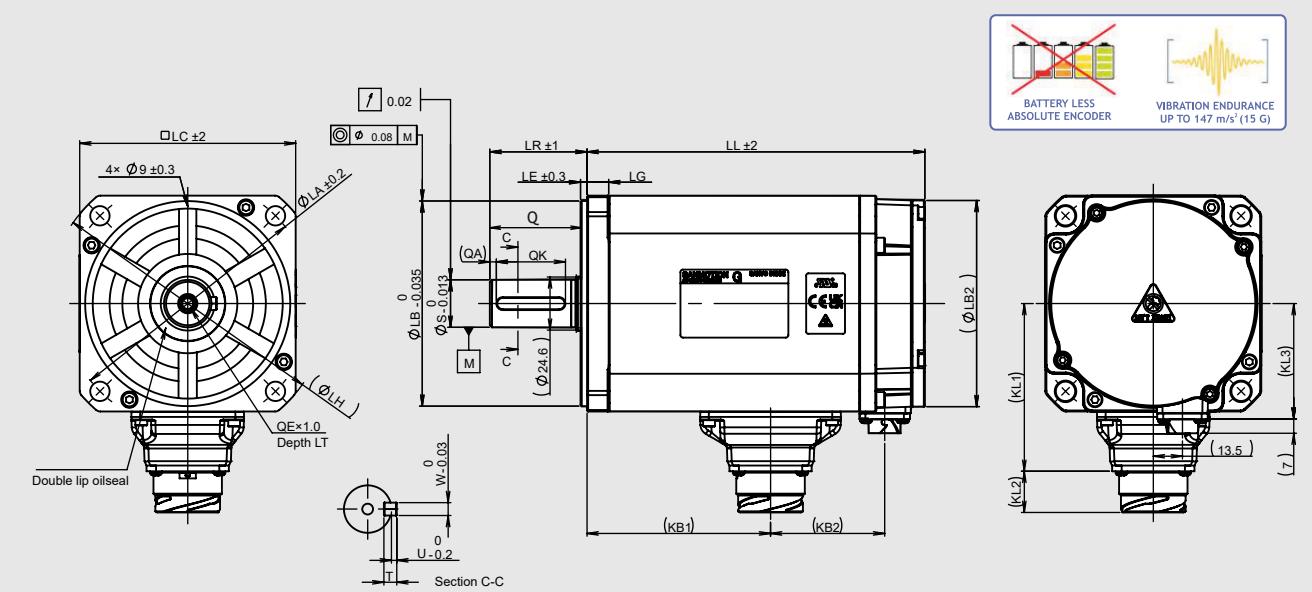

without brake LL	KB2	with brake LL	KB2	KL1	KL2	KL3	LG	LA	LB	LE	LH	LC	LZ1	LB2	LR	S	Q	QA	QK	W	T	U	KB1	QE	LT
161	45	205.5	90	78	19	54	10	115	0 95.5-0.035	3	130	100	9	95.5	45	0 22-0.013	40	3	32	0 6-0.03	6	2.5	97.5	M6	20

FEATURES

MODEL		GAM2AA150B0XRB3 [GAM2AA150B0CRB3]
NOMINAL POWER	(W)	1500
NOMINAL SPEED	(rpm)	2000
MAXIMUM SPEED	(rpm)	2000
NOMINAL TORQUE	(Nm)	7.2
STALL TORQUE	(Nm)	7.7
MAXIMUM TORQUE	(Nm)	20.5
INERTIA	($Kg*m^2$)	$6.10x10^{-4}$ [$6.45x10^{-4}$]
ENCODER	(imp./rev)	SINGLE TURN: 131072 imp/rev (17 bit) MULTI TURN: 65536 turns (16 bit)
PROTECTION DEGREE		IP67
WEIGHT [version with brake]	(Kg)	5.9 [7.5]

TORQUE CURVE
GAM2AA10150B0X[C] + RS3A03

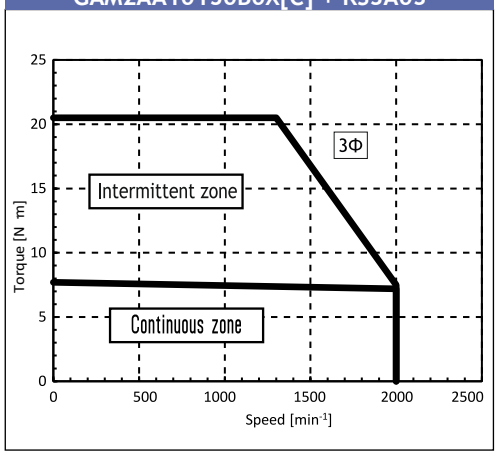

WITHOUT BRAKE
GAM2AA150B0XRB3

Indicated performances refer to motor controlled by related new RS3 standard and EtherCat amplifiers.

1Φ torque curve with single phase power supply
3Φ = torque curve with three-phase power supply

WITH BRAKE
GAM2AA150B0CRB3

Suggested amplifiers: RS3A03A2HA4W00, RS3A03A0AA2, RS3A03A2HAE

GAM1AA150F0XRB3

Dimensions (Unit:mm)

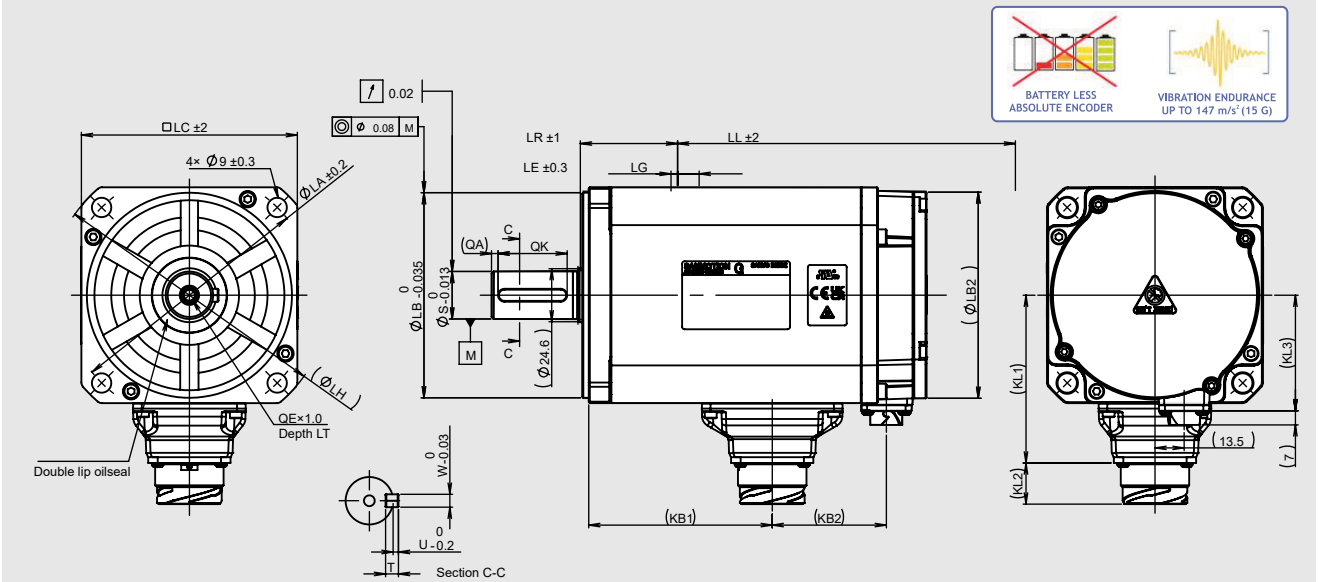

without brake LL	without brake KB2	with brake LL	with brake KB2	KL1	KL2	KL3	LG	LA	LB	LE	LH	LC	LZ1	LB2	LR	S	QA	QK	W	T	U	KB1	QE	LT
161	53	205.5	90	78	19	54	10	115	0 95.5-0.035	3	130	100	9	95.5	45	0 22-0.013	3	32	0 6-0.03	6	2.5	85	M6	20

FEATURES

MODEL		GAM1AA150F0XRB3
NOMINAL POWER	(W)	1500
NOMINAL SPEED	(rpm)	3000
MAXIMUM SPEED	(rpm)	6000
NOMINAL TORQUE	(Nm)	4.8
STALL TORQUE	(Nm)	4.9
MAXIMUM TORQUE	(Nm)	15.0
INERTIA	($Kg*m^2$)	$1.98x10^{-4}$
ENCODER	(imp./rev)	SINGLE TURN: 131072 imp/rev (17 bit) MULTI TURN: 65536 turns (16 bit)
PROTECTION DEGREE		IP67
WEIGHT	(Kg)	5.0

TORQUE CURVE
GAM1AA150F0XRB3 + RS3A05

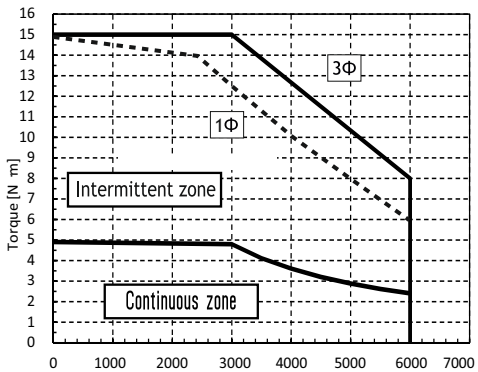

GAM1AA150F0XRB3

Indicated performances refer to motor controlled by related new RS3 standard and EtherCat amplifiers.

1Φ torque curve with single phase power supply
3Φ = torque curve with three-phase power supply

Suggested amplifiers: RS3A05A2HA4W00, RS3A05A0AA2, RS3A05A2HAE

R2AA13200LXR00M (R2AA13200LCR00M)

Dimensions (Unit:mm)

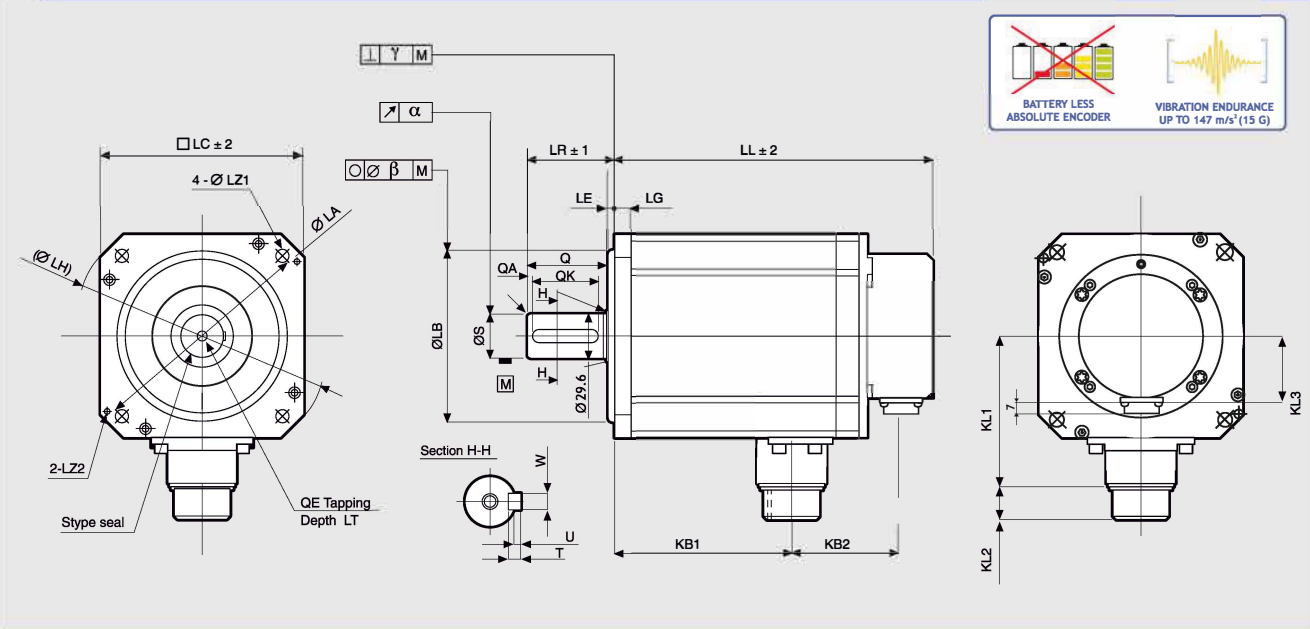

without brake LL	without brake KB2	with brake LL	with brake KB2	KL1	KL2	KL3	LG	LA	LB	LE	LH	LC	LZ1	LZ2	LR	S	Q	QA	QK	W	T	U	KB1	QE	LT
171	57	216	103	98	21	38	12	145	0 110-0	4	165	130	9	M6	55	0 28-0.013	50	3	42	0 8-0.036	7	3	99	M8	25

FEATURES

MODEL		R1AA13200LXR00M
NOMINAL POWER	(W)	2000
NOMINAL SPEED	(rpm)	2000
MAXIMUM SPEED	(rpm)	3000
NOMINAL TORQUE	(Nm)	9.5
STALL TORQUE	(Nm)	12
MAXIMUM TORQUE	(Nm)	24
INERTIA	(Kg*m²)	12.2×10^{-4}
ENCODER	(imp./rev)	SINGLE TURN: 131072 imp/rev (17 bit) MULTI TURN: 65536 turns (16 bit)
PROTECTION DEGREE		IP65
WEIGHT [version with brake]	(Kg)	10 (12)

TORQUE CURVE
R1AA13200F [2kW] + RS3A05

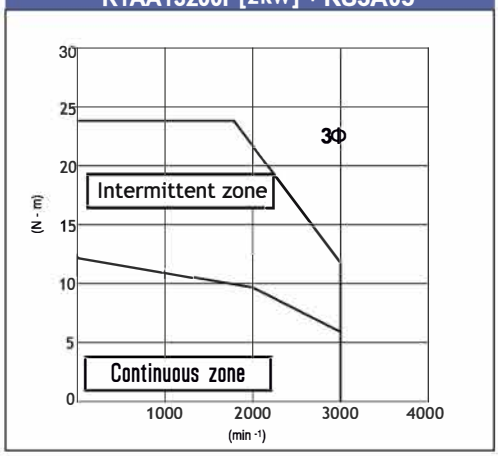

WITHOUT BRAKE
R2AA13200LXR00M

Indicated performances refer to motor controlled by related new RS3 standard and EtherCat amplifiers.

3Φ = torque curve with three-phase power supply

WITHOUT BRAKE
R2AA13200LCR00M

Suggested amplifiers: RS3A05A0AA2, RS3A05A2HA4W00

R1AA13300FXR00M (R1AA13300FCR00M)

SANYO DENKI
SANMOTION

Dimensions (Unit:mm)

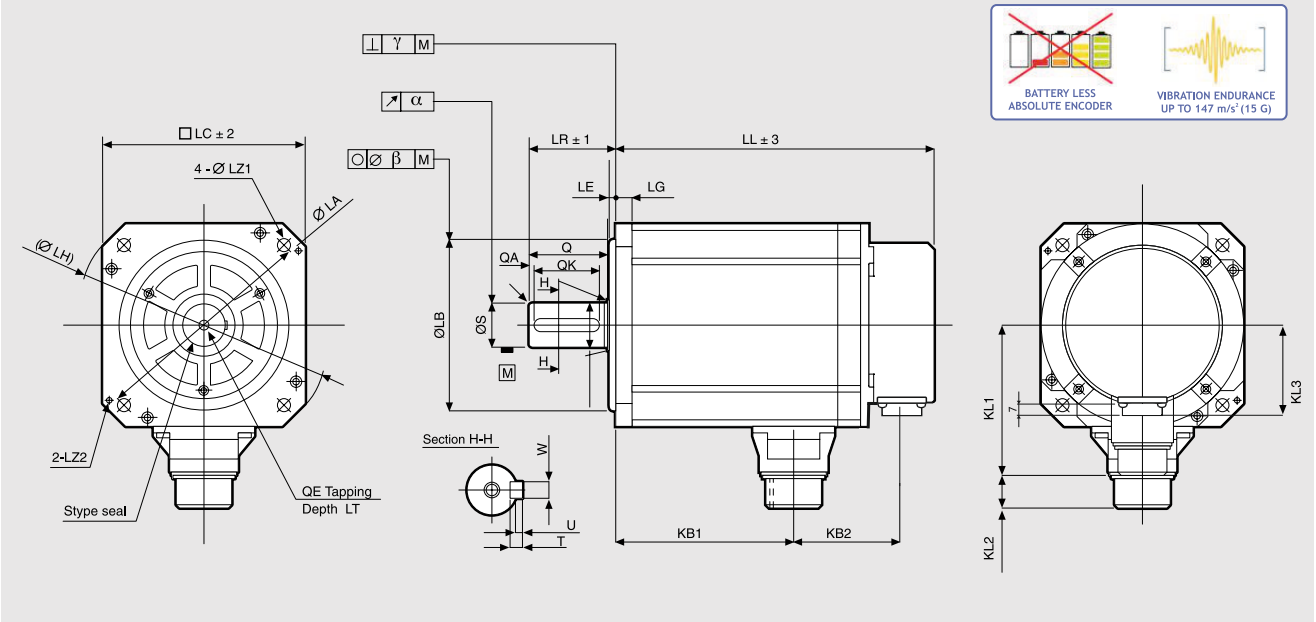

without brake LL	without brake KB2	with brake LL	with brake KB2	KL1	KL2	KL3	LG	LA	LB	LE	LH	LC	LZ1	LZ2	LR	S	Q	QA	QK	W	T	U	KB1	QE	LT
184	57	230	103	98	21	45	12	145	0 110-0.035	4	165	130	9	M6	55	0 28-0.013	50	3	42	0 8-0.036	7	3	112	M8	25

FEATURES

MODEL		R1AA13300FXR00M
NOMINAL POWER	(W)	3000
NOMINAL SPEED	(rpm)	3000
MAXIMUM SPEED	(rpm)	6000
NOMINAL TORQUE	(Nm)	9.7
STALL TORQUE	(Nm)	9.7
MAXIMUM TORQUE	(Nm)	29
INERTIA	(Kg*m²)	7×10^{-4}
ENCODER	(imp./rev)	SINGLE TURN: 131072 imp/rev (17 bit) MULTI TURN: 65536 turns
PROTECTION DEGREE		IP65
WEIGHT [version with brake]	(Kg)	9.7 [11.8]

TORQUE CURVE
R1AA13300F [3kW] + RS3A10

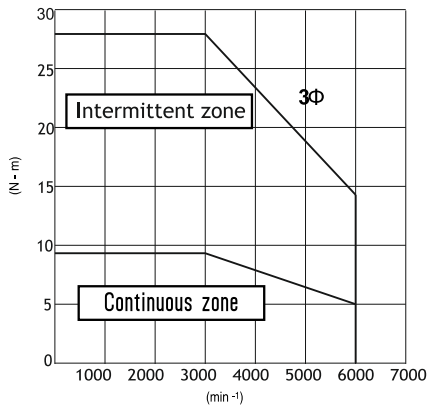

WITHOUT BRAKE
R1AA13300FXR00M

Indicated performances refer to motor controlled by related new RS3 standard and EtherCat amplifiers.

3Φ = torque curve with three-phase power supply

WITH BRAKE
R1AA13300FCR00M

Suggested amplifiers: RS3A10A0AA2, RS3A10A2HA4W00P

SERVO SYSTEMS

230 VAC SERVOMOTORS - INCREMENTAL ENCODER

For cable options please see the table at the end of the section.

R2AA04010FXH1CM (R2AA04010FCH1CM6)

SANYO DENKI
SANMOTION

Dimensions (Unit:mm)

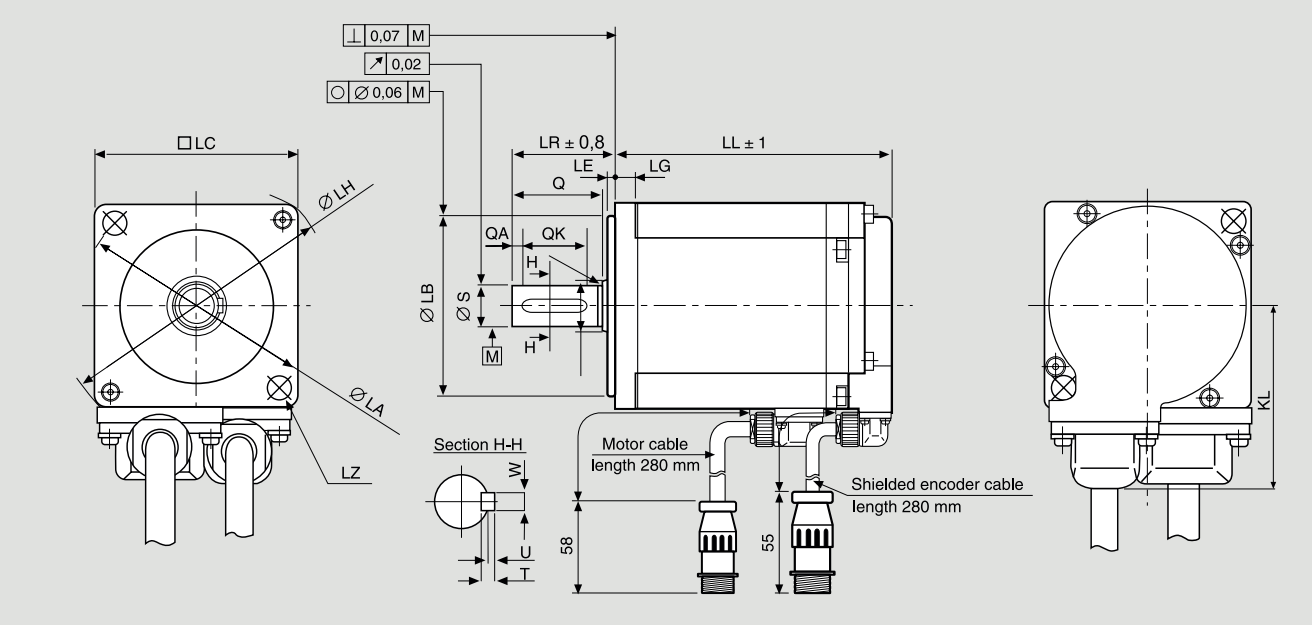

without brake LL	with brake LL	LG	KL	LA	LB	LE	LH	LC	LZ	LR	S	Q	QA	QK	W	T	U	QE	LT
72	108	5	35.4	46	0 30-0.021	2.5	56	40	2-Ø4.5	25	0 8-0.009	20	2	12	3	3	1.2	--	--

FEATURES

MODEL		R2AA04010FXH1CM
NOMINAL POWER [version with brake]	(W)	100 [90]
NOMINAL SPEED	(rpm)	3000
MAXIMUM SPEED	(rpm)	6000
NOMINAL TORQUE	(Nm)	0.318
STALL TORQUE	(Nm)	0.318
MAXIMUM TORQUE	(Nm)	1.18
INERTIA	($Kg*m^2$)	0.0627×10^{-4}
ENCODER	(imp./rev)	131072 (17 bit)
PROTECTION DEGREE		IP67*
WEIGHT [version with brake]	(Kg)	0.39 [0.62]

* Protection degree IP67 (except for the shaft hole and the edge of the cable).

TORQUE CURVE
R2AA04010F [100W] + RS3A03

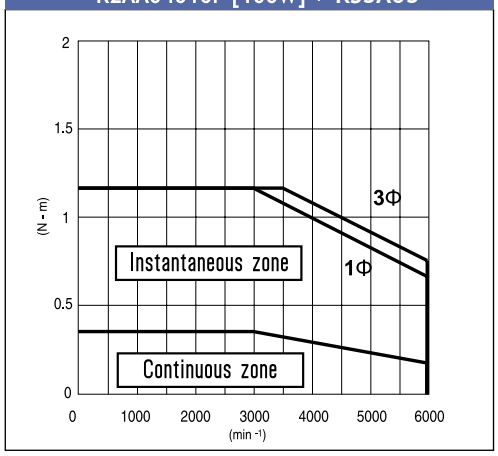

WITHOUT BRAKE
R2AA04010FXH1CM

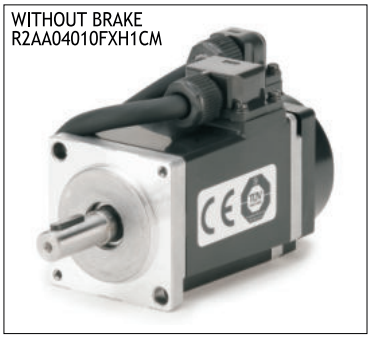

Indicated performances refer to motor controlled by related new RS3 standard and EtherCat amplifiers.

1Φ torque curve with single phase power supply
3Φ = torque curve with three-phase power supply

WITH BRAKE
R2AA04010FCH1CM6

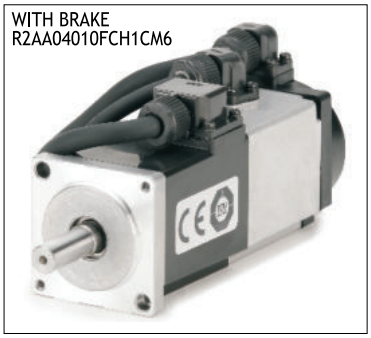

Suggested amplifiers: RS3A03A0AL0W00P, RS3A03A2HA4W00P, RS3A03A0AL2

R2AA06020FXH11M (R2AA06020FCH11M)

SANYO DENKI
SANMOTION

Dimensions (Unit:mm)

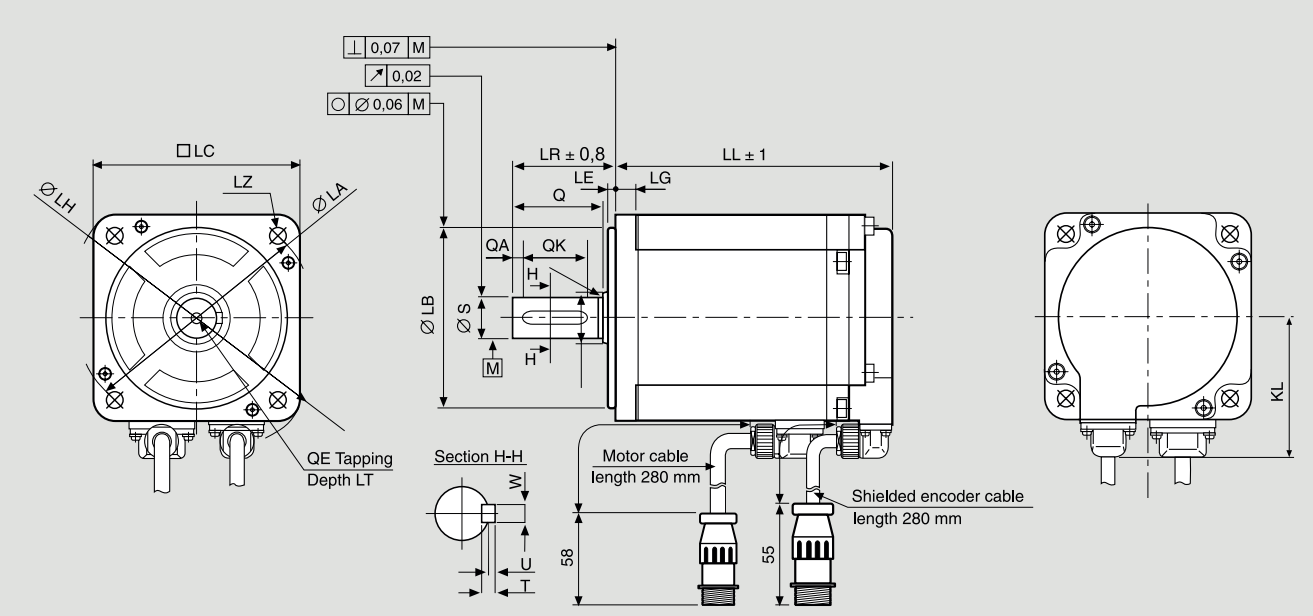

without brake LL	with brake LL	LG	KL	LA	LB	LE	LH	LC	LZ	LR	S	Q	QA	QK	W	T	U	QE	LT
69.5	97.5	6	44.6	70	0 50-0.025	3.0	82	60	4-Ø5.5	30	0 14-0.011	25	2	20	5	5	2	M5	12

FEATURES

MODEL	R2AA06020FXH11M
NOMINAL POWER [version with brake] (W)	200
NOMINAL SPEED (rpm)	3000
MAXIMUM SPEED (rpm)	6000
NOMINAL TORQUE (Nm)	0.637
STALL TORQUE (Nm)	0.686
MAXIMUM TORQUE (Nm)	2.20
INERTIA (Kg*m²)	0.219×10^{-4}
ENCODER (imp./rev)	131072 (17 bit)
PROTECTION DEGREE	IP67
WEIGHT [version with brake] (Kg)	0.84 [1.19]

* Protection degree IP67 (except for the shaft hole and the edge of the cable).

TORQUE CURVE
R2AA06020F [200W] + RS3A03

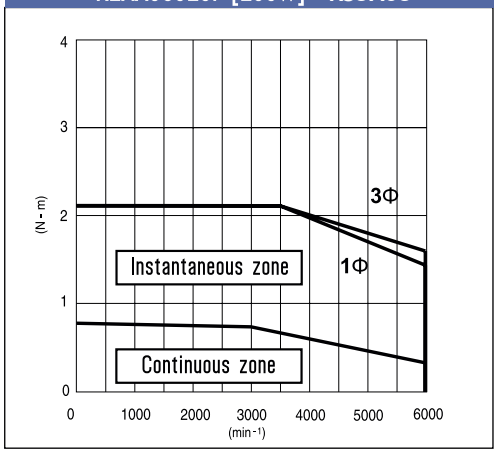

WITHOUT BRAKE
R2AA06020FXH11M

Indicated performances refer to motor controlled by related new RS3 standard and EtherCat amplifiers.

1Φ torque curve with single phase power supply
3Φ = torque curve with three-phase power supply

WITH BRAKE
R2AA06020FCH11M

Suggested amplifiers: RS3A03A0AL0W00P, RS3A03A2HA4W00P, RS3A03A0AL2

R2AA06040FXH11M (R2AA06040FCH11M6)

SANYO DENKI
SANMOTION

Dimensions (Unit:mm)

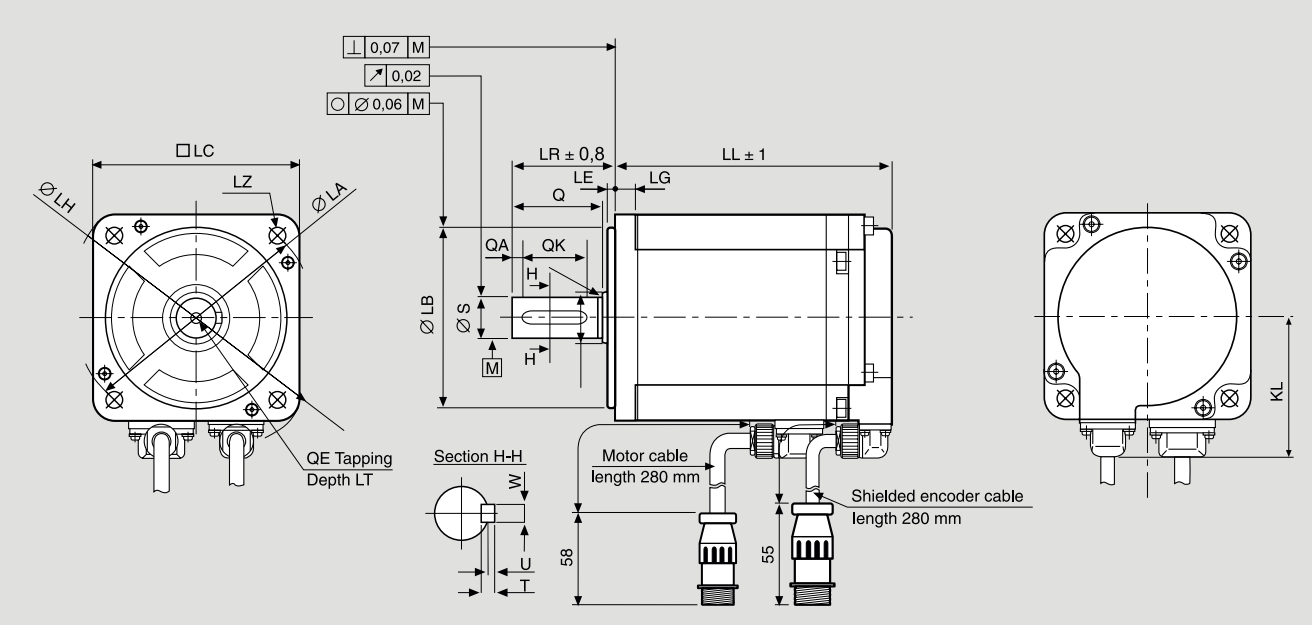

without brake LL	with brake LL	LG	KL	LA	LB	LE	LH	LC	LZ	LR	S	Q	QA	QK	W	T	U	QE	LT
95.5	123.5	6	44.6	70	0 50-0.025	3.0	82	60	4-Ø5.5	30	0 14-0.011	25	2	20	5	5	2	M5	12

FEATURES

MODEL		R2AA06040FXH11M
NOMINAL POWER [version with brake]	(W)	400 [360]
NOMINAL SPEED	(rpm)	3000
MAXIMUM SPEED	(rpm)	6000
NOMINAL TORQUE	(Nm)	1.270
STALL TORQUE	(Nm)	1.370
MAXIMUM TORQUE	(Nm)	4.80
INERTIA	(Kg*m²)	0.412×10^{-4}
ENCODER	(imp./rev)	131072 (17 bit)
PROTECTION DEGREE		IP67
WEIGHT [version with brake]	(Kg)	1.30 [1.65]

* Protection degree IP67 (except for the shaft hole and the edge of the cable).

TORQUE CURVE
R2AA06040F [400W] + RS3A03

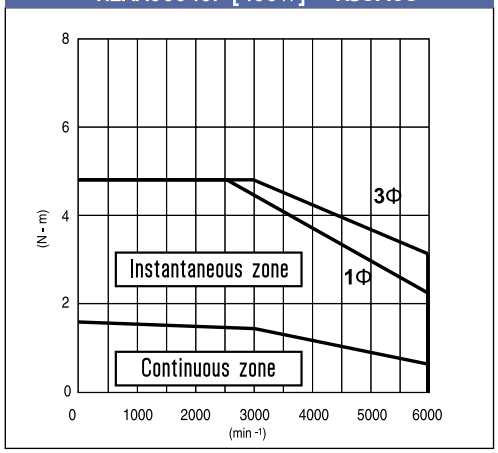

WITHOUT BRAKE
R2AA06040FXH11M

Indicated performances refer to motor controlled by related new RS3 standard and EtherCat amplifiers.

1Φ torque curve with single phase power supply
3Φ = torque curve with three-phase power supply

WITH BRAKE
R2AA06040FCH11M

Suggested amplifiers: RS3A03A0AL0W00P, RS3A03A2HA4W00P, RS3A03A0AL2

R2AA08075FXH11M (R2AA08075FCH11M)

SANYO DENKI
SANMOTION

Dimensions (Unit:mm)

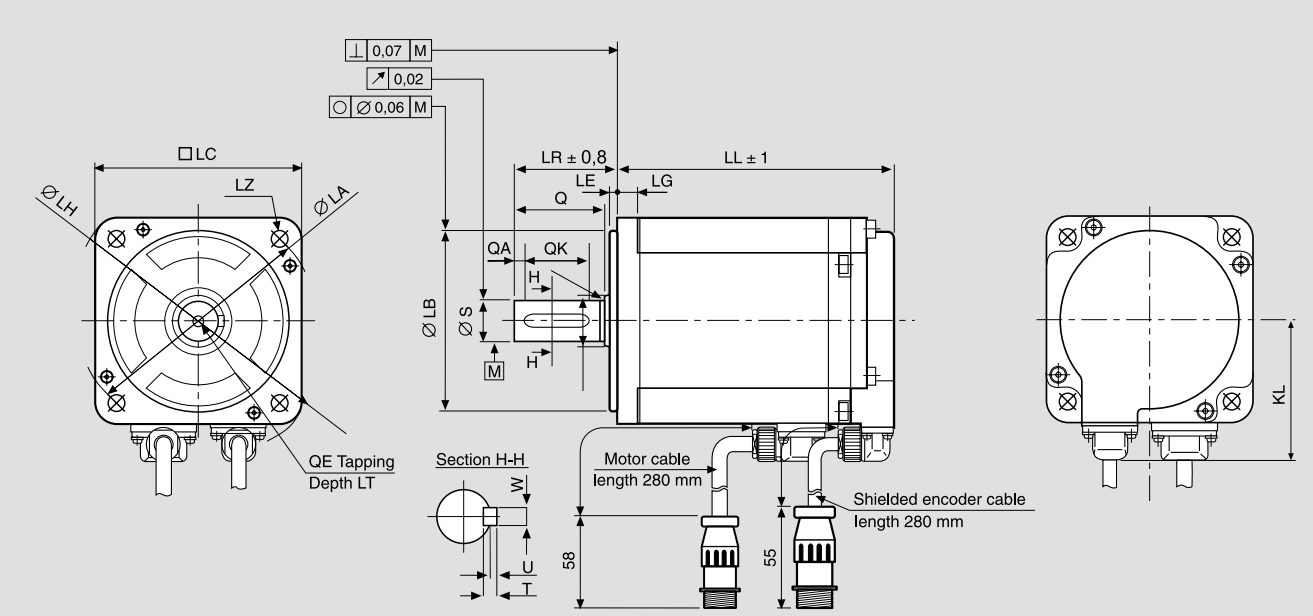

without brake LL	with brake LL	LG	KL	LA	LB	LE	LH	LC	LZ	LR	S	Q	QA	QK	W	T	U	QE	LT
107.3	143	8	54.4	90	0 70-0.030	3.0	108	80	4-Ø6.6	40	0 16-0.011	35	4	25	5	5	2	M5	12

FEATURES

MODEL		R2AA08075FXH11M
NOMINAL POWER	(W)	750
NOMINAL SPEED	(rpm)	3000
MAXIMUM SPEED	(rpm)	6000
NOMINAL TORQUE	(Nm)	2.390
STALL TORQUE	(Nm)	2.550
MAXIMUM TORQUE	(Nm)	8.50
INERTIA	($Kg*m^2$)	1.820×10^{-4}
ENCODER	(imp./rev)	131072 (17 bit)
PROTECTION DEGREE		IP67
WEIGHT [version with brake]	(Kg)	2.60 [3.45]

* Protection degree IP67 (except for the shaft hole and the edge of the cable).

TORQUE CURVE
R2AA08075F [750W] + RS3A03

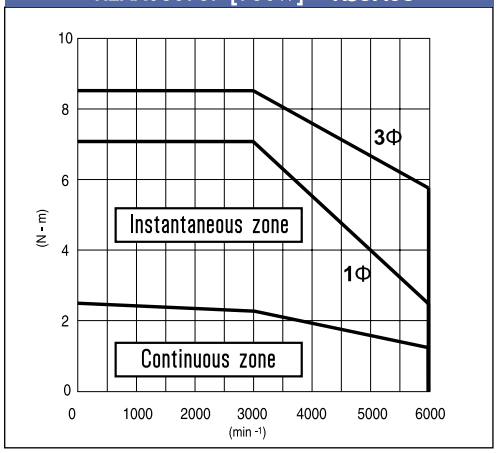

WITHOUT BRAKE
R2AA08075FXH11M

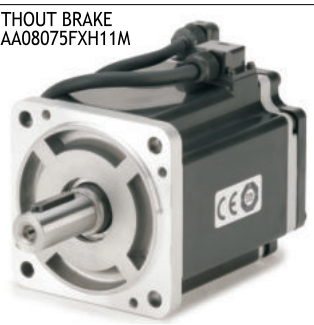

Indicated performances refer to motor controlled by related new RS3 standard and EtherCat amplifiers.

1Φ torque curve with single phase power supply
3Φ = torque curve with three-phase power supply

WITH BRAKE
R2AA08075FCH11M

Suggested amplifiers: RS3A03A0AL0W00P, RS3A03A2HA4W00P, RS3A03A0AL2

R2AAB8100HXH29M (R2AAB8100HCH29M)

SANYO DENKI
SANMOTION

Dimensions (Unit:mm)

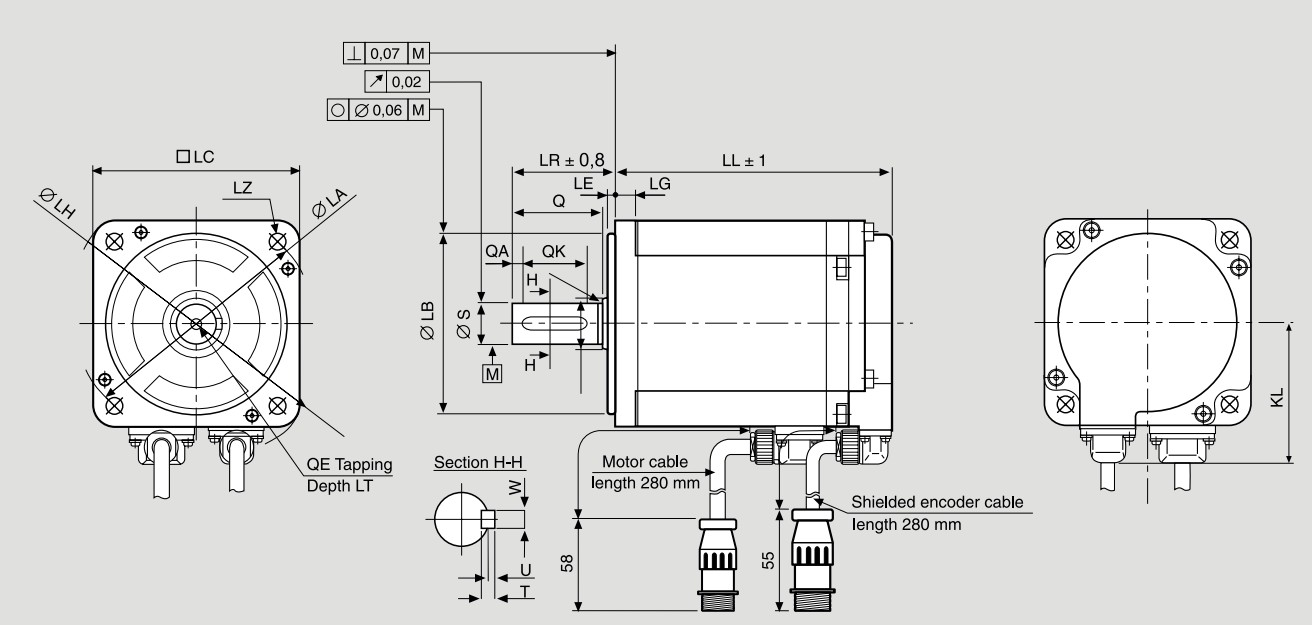

without brake LL	with brake LL	LG	KL	LA	LB	LE	LH	LC	LZ	LR	S	Q	QA	QK	W	T	U	QE	LT
137	163	8	59.4	100	0 80-0.003	3.0	115.5	86	4-Ø6.6	35	0 16-0.011	30	2	25	5	5	2	M5	12

FEATURES

MODEL		R2AAB8100HXH29M
NOMINAL POWER	(W)	1000
NOMINAL SPEED	(rpm)	3000
MAXIMUM SPEED	(rpm)	3000
NOMINAL TORQUE	(Nm)	3.180
STALL TORQUE	(Nm)	3.920
MAXIMUM TORQUE	(Nm)	11.60
INERTIA	($Kg*m^2$)	2.383×10^{-4}
ENCODER	(imp./rev)	131072 (17 bit)
PROTECTION DEGREE		IP67*
WEIGHT [version with brake]	(Kg)	3.50 [4.30]

* Protection degree IP67 (except for the shaft hole and the edge of the cable).

TORQUE CURVE
R2AAB8100H [1kW] + RS3A03

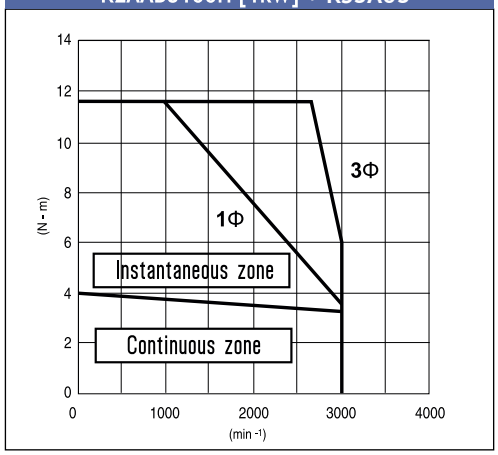

WITHOUT BRAKE
R2AAB8100HXH29M

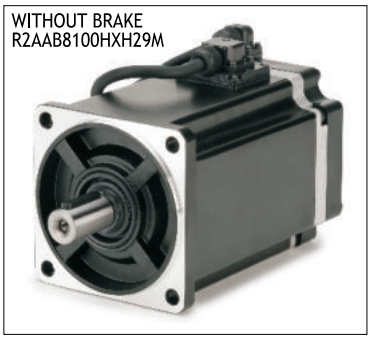

Indicated performances refer to motor controlled by related new RS3 standard and EtherCat amplifiers.

1Φ torque curve with single phase power supply
3Φ = torque curve with three-phase power supply

WITH BRAKE
R2AAB8100HCH29M

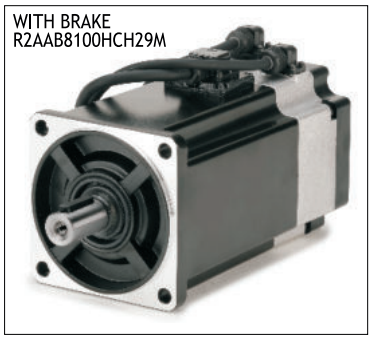

Suggested amplifiers: RS3A03A0AL0W00P, RS3A03A2HA4W00P, RS3A03A0AL2

Q2AA10150BXH48M (Q2AA10150BCH48M)

SANYO DENKI
SANMOTION

Dimensions (Unit:mm)

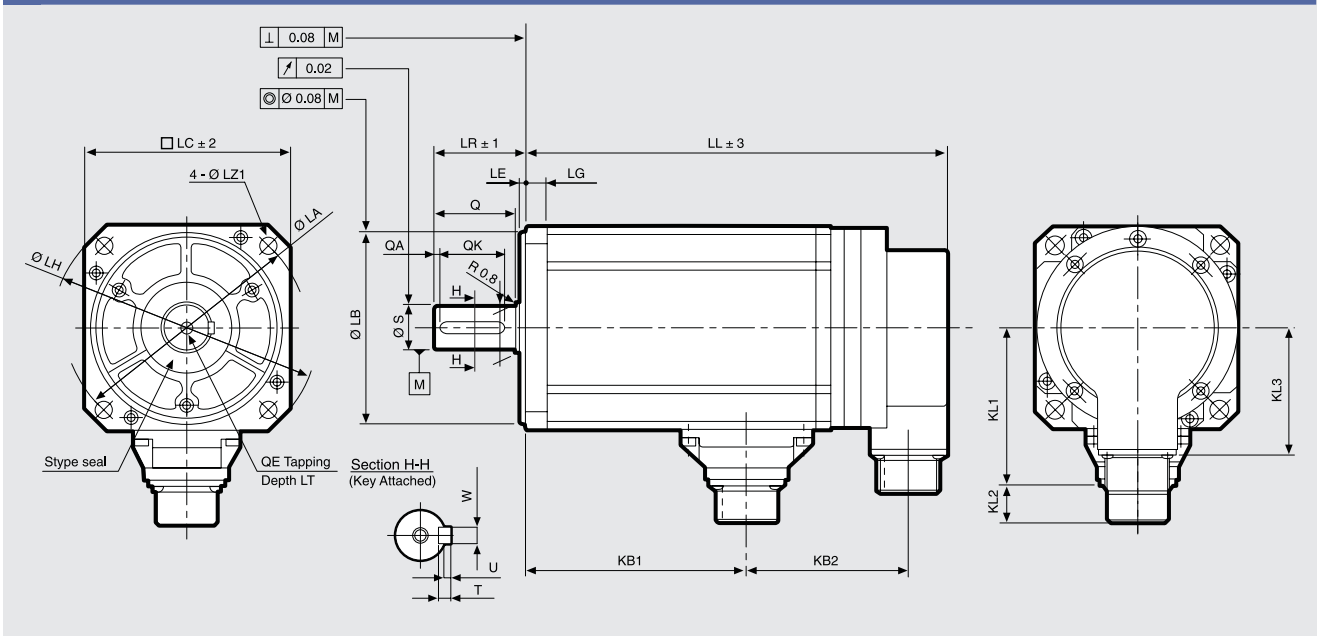

without brake LL	KB2	with brake LL	KB2	KL1	KL2	KL3	LG	LA	LB	LE	LH	LC	LZ1	LZ2	LR	S	Q	QA	QK	W	T	U	KB1	QE	LT
237	88	272,5	124	78	19	64	10	115	0 95-0.035	3	130	100	9	--	45	0 22-0.013	40	3	32	0 6-0.030	6	2.5	128	M6	20

FEATURES

MODEL		Q2AA10150BXH48M
NOMINAL POWER	(W)	1500
NOMINAL SPEED	(rpm)	2000
MAXIMUM SPEED	(rpm)	2000
NOMINAL TORQUE	(Nm)	7.2
STALL TORQUE	(Nm)	7.7
MAXIMUM TORQUE	(Nm)	20.5
INERTIA	($Kg*m^2$)	8.0×10^{-4}
ENCODER	(imp./rev)	131072 (17 bit)
PROTECTION DEGREE		IP67
WEIGHT [version with brake]	(Kg)	7.0 [8.5]

TORQUE CURVE
Q2AA10150B [1.5kW] + RS3A03

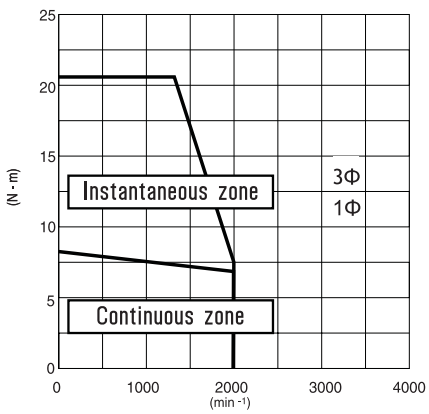

Q2AA10150BXH48M

Indicated performances refer to motor controlled by related new RS3 standard and EtherCat amplifiers.

1Φ torque curve with single phase power supply
3Φ = torque curve with three-phase power supply

Q2AA10150BCH48M

Suggested amplifiers: RS3A03A0AL0W00P, RS3A03A2HA4W00P, RS3A03A0AL2

R1AA10150FXH00M (R1AA10150FCH00M)

SANYO DENKI
SANMOTION

Dimensions (Unit:mm)

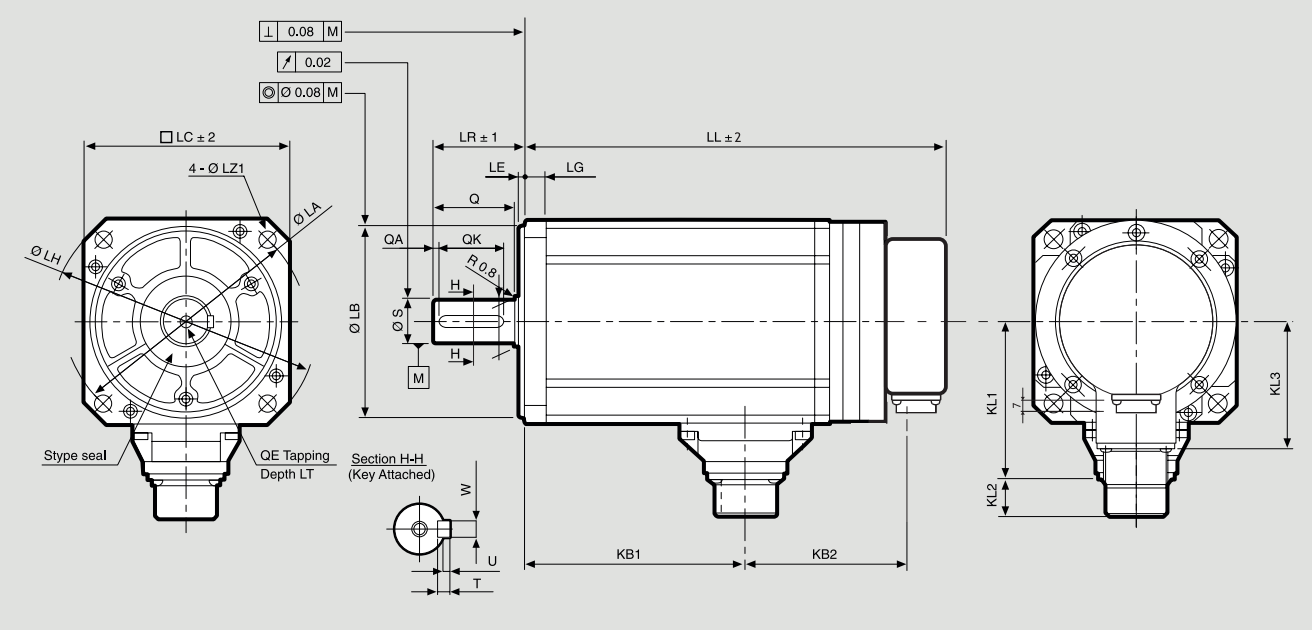

without brake LL	without brake KB2	with brake LL	with brake KB2	KL1	KL2	KL3	LG	LA	LB	LE	LH	LC	LZ1	LZ2	LR	S	Q	QA	QK	W	T	U	KB1	QE	LT
168	68	209	109	78	19	70	10	115	0 95-0.035	3	130	100	9	--	45	0 22-0.013	40	3	32	0 6-0.030	6	2.5	85	M6	20

FEATURES

MODEL		R1AA10150FXH00M
NOMINAL POWER	(W)	1500
NOMINAL SPEED	(rpm)	3000
MAXIMUM SPEED	(rpm)	6000
NOMINAL TORQUE	(Nm)	4.80
STALL TORQUE	(Nm)	4.90
MAXIMUM TORQUE	(Nm)	15
INERTIA	$(Kg*m)^2$	2×10^{-4}
ENCODER	(imp./rev)	131072 (17 BIT)
PROTECTION DEGREE		IP65
WEIGHT [version with brake]	(Kg)	5 [6.6]

TORQUE CURVE
R1AA10150F [1.5kW] + RS3A05

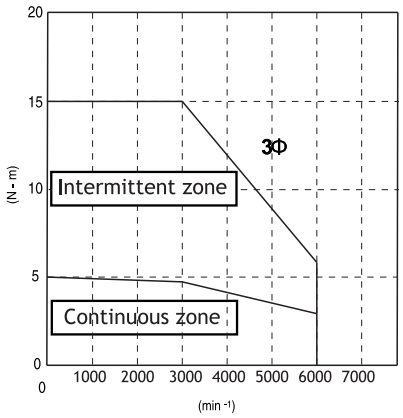

R1AA10150FXH00M
R1AA10150FCH00M

Indicated performances refer to motor by related new RS3 standard and EtherCat amplifiers.

3Φ = torque curve with three-phase power supply

Suggested amplifiers: RS3A05A0AA2, RS3A05A2HA4

R2AA13200LXHW0M (R2AA13200LCHW0M)

SANYO DENKI
SANMOTION

Dimensions (Unit:mm)

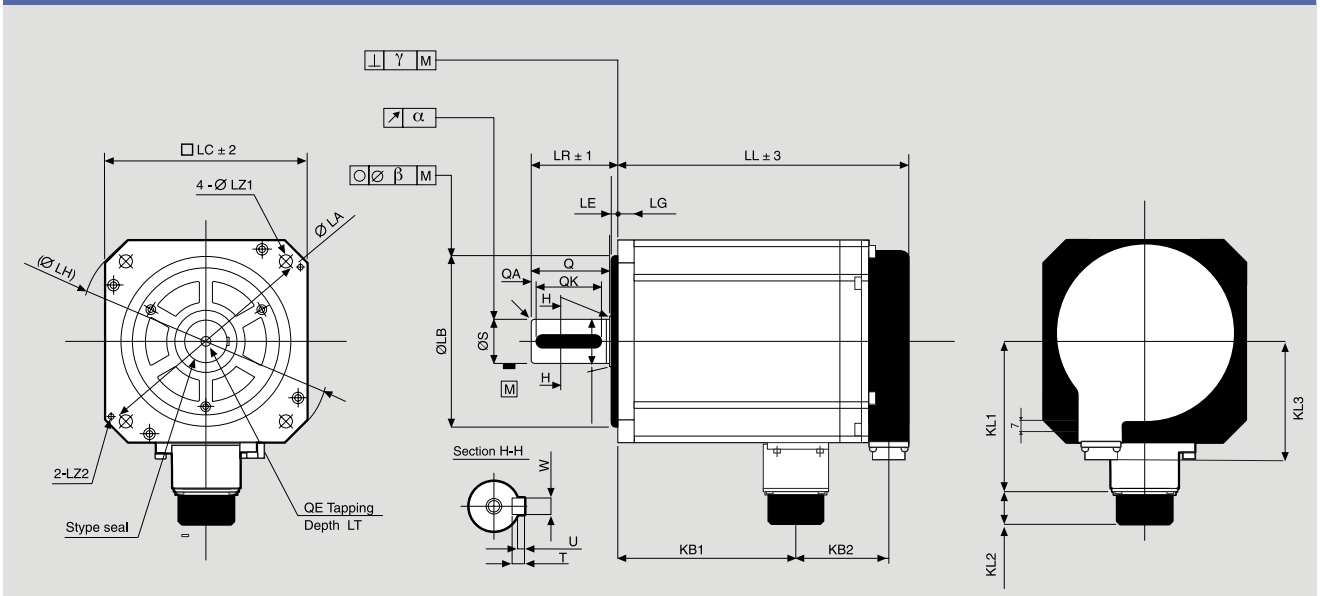

without brake LL	without brake KB2	with brake LL	with brake KB2	KL1	KL2	KL3	LG	LA	LB	LE	LH	LC	LZ1	LZ2	LR	S	Q	QA	QK	W	T	U	KB1	QE	LT
160	48	201	90	98	21	69	12	145	0 110-0.035	4	165	130	9	M6	55	0 28-0.013	50	3	42	0 8-0.036	7	3	99	M8	25

FEATURES

MODEL		R2AA13200LXHW0M
NOMINAL POWER	(W)	2000
NOMINAL SPEED	(rpm)	2000
MAXIMUM SPEED	(rpm)	3000
NOMINAL TORQUE	(Nm)	9.5
STALL TORQUE	(Nm)	12
MAXIMUM TORQUE	(Nm)	24
INERTIA	($Kg*m^2$)	12.2×10^{-4}
ENCODER	(imp./rev)	131072 (17BIT)
PROTECTION DEGREE		IP65
WEIGHT [version with brake]	(Kg)	9.0 [11]

TORQUE CURVE
R2AA13200L [2kW] + RS3A05

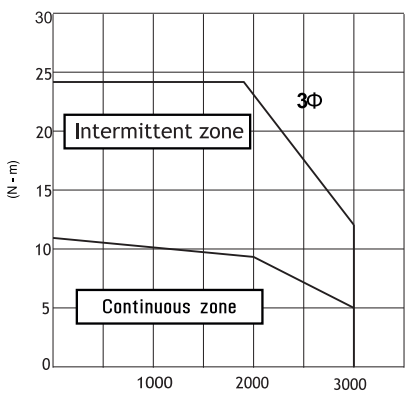

WITHOUT BRAKE
R2AA13200LXHW0M

Indicated performances refer to motor controlled by related new RS3 standard and EtherCat amplifiers.

3Φ = torque curve with three-phase power supply

WITH BRAKE
R2AA13200LCHW0M

Suggested amplifiers: RS3A05A0AA2, RS3A05A2HA4W00P

R1AA13300FXH00M (R1AA13300FCH00M)

SANYO DENKI
SANMOTION

Dimensions (Unit:mm)

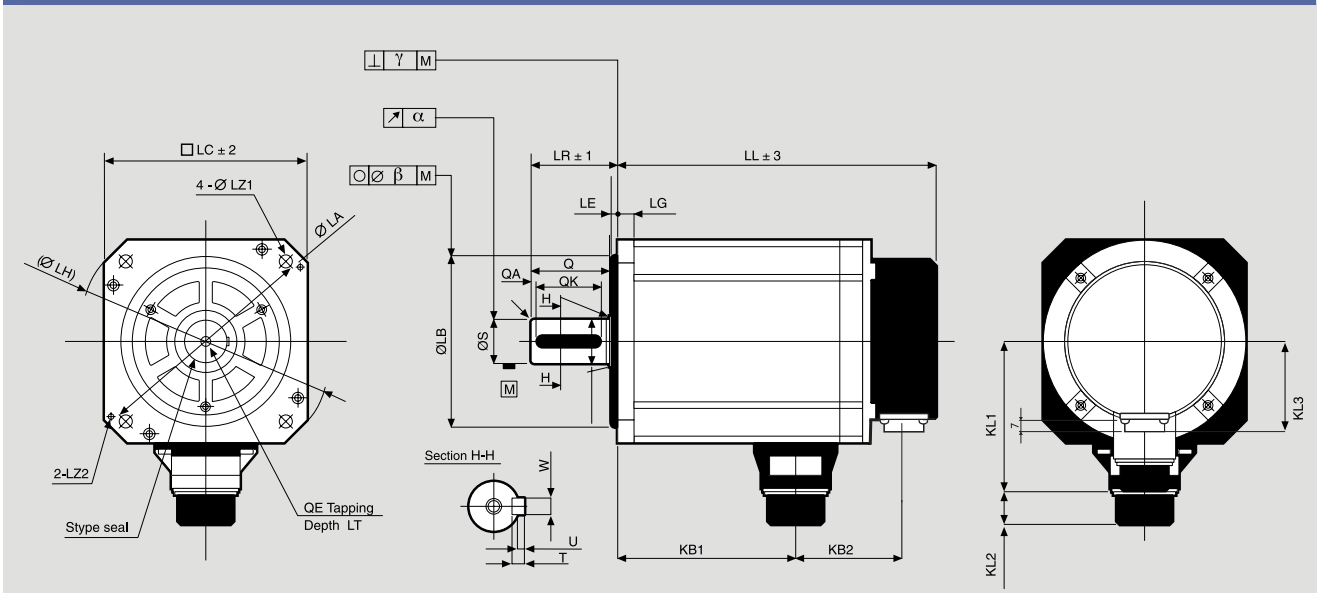

without brake LL	without brake KB2	with brake LL	with brake KB2	KL1	KL2	KL3	LG	LA	LB	LE	LH	LC	LZ1	LZ2	LR	S	Q	QA	QK	W	T	U	KB1	QE	LT
184	57	230	103	98	21	78	12	145	0 110-0.035	4	165	130	9	M6	55	0 28-0.013	50	3	42	0 8-0.036	7	3	112	M8	25

FEATURES

MODEL		R1AA13300FXH00M
NOMINAL POWER	(W)	3000
NOMINAL SPEED	(rpm)	3000
MAXIMUM SPEED	(rpm)	6000
NOMINAL TORQUE	(Nm)	9.7
STALL TORQUE	(Nm)	9.7
MAXIMUM TORQUE	(Nm)	29
INERTIA	($Kg*m^2$)	7×10^{-4}
ENCODER	(imp./rev)	131072 (17BIT)
PROTECTION DEGREE		IP65
WEIGHT [version with brake]	(Kg)	9.7 [11.8]

TORQUE CURVE
R1AA13300F [3kW] + RS3A10

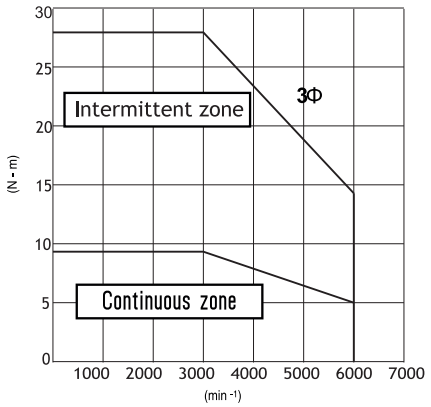

WITHOUT BRAKE
R1AA13300FXH00M

Indicated performances refer to motor controlled by related new RS3 standard and EtherCat amplifiers.

3Φ = torque curve with three-phase power supply

WITH BRAKE
R1AA13300FC00M

Suggested amplifiers: RS3A10A0AA2, RS3A10A2HA4W00P

SERVO SYSTEMS

400 VAC SERVOMOTORS
BATTERY LESS MULTI-TURN ABSOLUTE ENCODER

For cable options please see the table at the end of the section.

R2CA18350LXR00M (R2CA18350LCR00M)

SANYO DENKI
SANMOTION

Dimensions (Unit:mm)

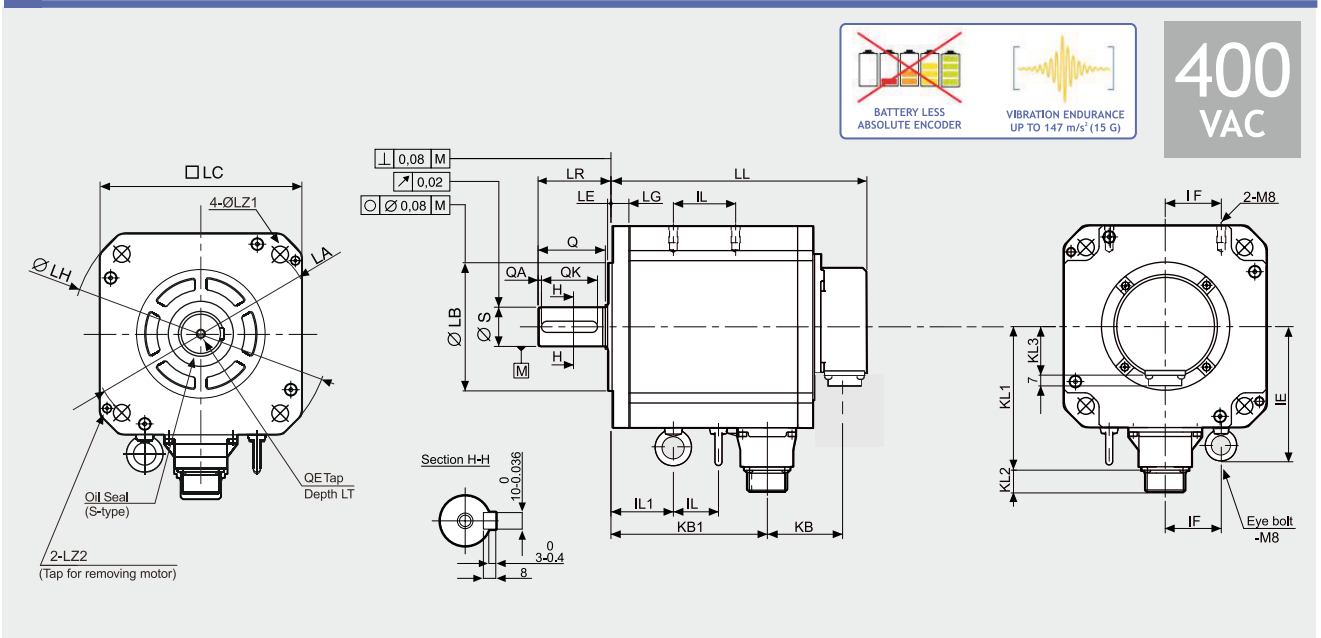

without brake LL	without brake KB2	with brake LL	with brake KB2	KL1	KL2	KL3	LG	LA	LB	LE	LH	LC	LZ1	LZ2	LR	S	Q	QA	QK	IL1	IL2	IF	IE	KB1	QE	LT
159	52	206	99	123	21	38	16	200	0 Ø114.3-0.035	3	Ø230	□180	Ø13.5	M8	65	0 Ø35-0.016	60	3	50	47	20	50	123	92	M8	25

FEATURES

MODEL		R2CA18350LXR00M (R2CA18350LCR00M)
NOMINAL POWER	(W)	3500
NOMINAL SPEED	(rpm)	2000
MAXIMUM SPEED	(rpm)	3000
NOMINAL TORQUE	(Nm)	17.0
STALL TORQUE	(Nm)	22.0
MAXIMUM TORQUE	(Nm)	49.0
INERTIA	($Kg*m^2$)	40×10^{-4}
BATTERY-LESS ABSOLUTE ENCODER	(imp./rev)	SINGLE TURN: 131072 imp/rev (17 bit) MULTI TURN: 65536 turns (16 bit)
PROTECTION DEGREE		IP65
WEIGHT	(Kg)	15.5

TORQUE CURVE
R2CA18350LXH [3.5kW] + RS3C05

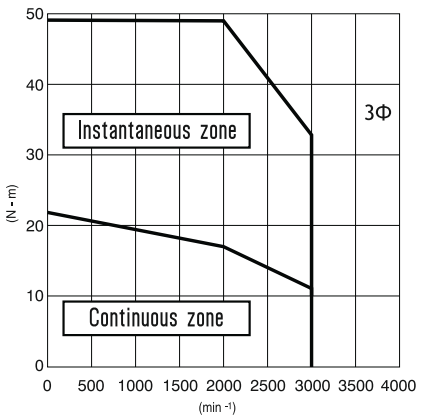

WITHOUT BRAKE

Indicated performances refer to motor controlled by related RS3 standard and EtherCat amplifiers.

3Φ = torque curve with three-phase power supply

WITH BRAKE

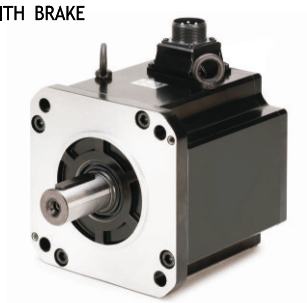

Suggested amplifiers: RS3C05A0AA2, RS3C05A2HA4

R2CA18450HXR00M (R2CA18450HCR00M)

SANYO DENKI
SANMOTION

Dimensions (Unit:mm)

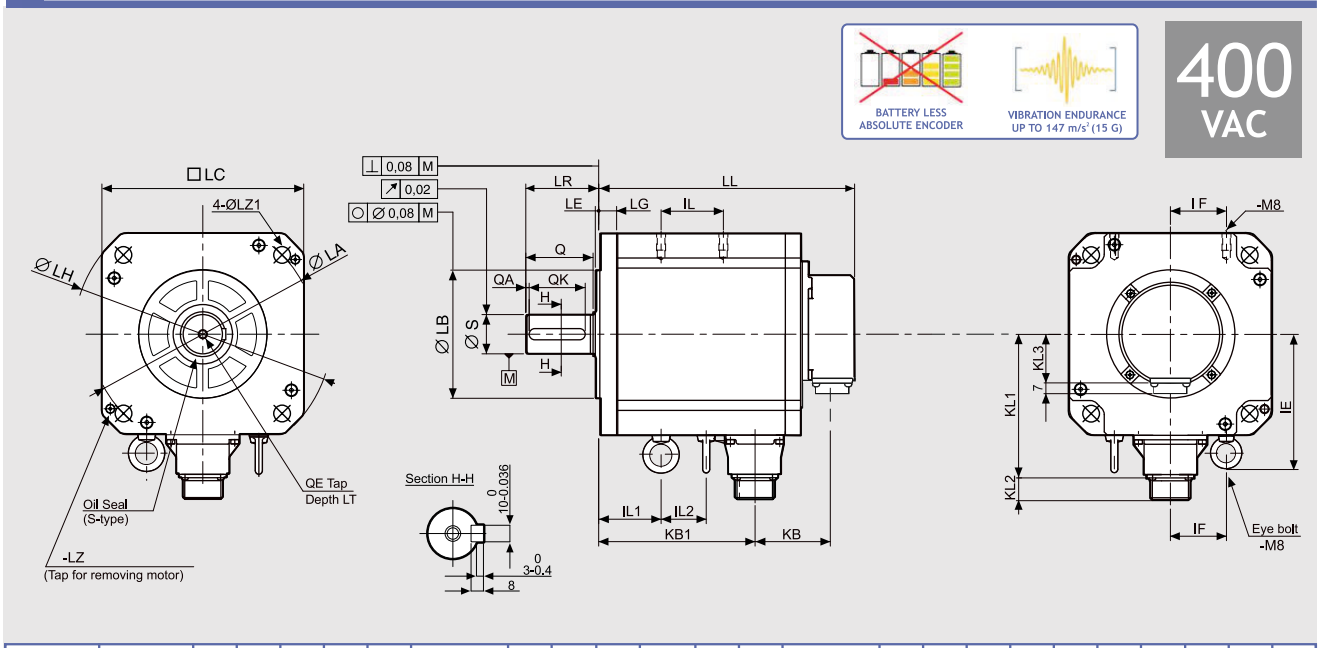

without brake LL	without brake KB2	with brake LL	with brake KB2	KL1	KL2	KL3	LG	LA	LB	LE	LH	LC	LZ1	LZ2	LR	S	Q	QA	QK	IL1	IL2	IF	IE	KB1	QE	LT
176	52	223	99	123	21	38	16	200	0 Ø114.3-0.035	3	Ø230	□180	Ø13.5	M8	65	0 Ø35-0.016	60	3	50	57	20	50	123	109	M8	25

FEATURES

MODEL		R2CA18450HXR00M (R2CA18450HCR00M)
NOMINAL POWER	(W)	4500
NOMINAL SPEED	(rpm)	2000
MAXIMUM SPEED	(rpm)	3500
NOMINAL TORQUE	(Nm)	21.5
STALL TORQUE	(Nm)	30
MAXIMUM TORQUE	(Nm)	75.0
INERTIA	(Kg*m²)	50×10^{-4}
BATTERY-LESS ABSOLUTE ENCODER	(imp./rev)	SINGLE TURN: 131072 imp/rev (17 bit) MULTI TURN: 65536 turns (16 bit)
PROTECTION DEGREE		IP65
WEIGHT	(Kg)	20 [24]

TORQUE CURVE
R2CA18450HX [4.5kW] + RS3C10

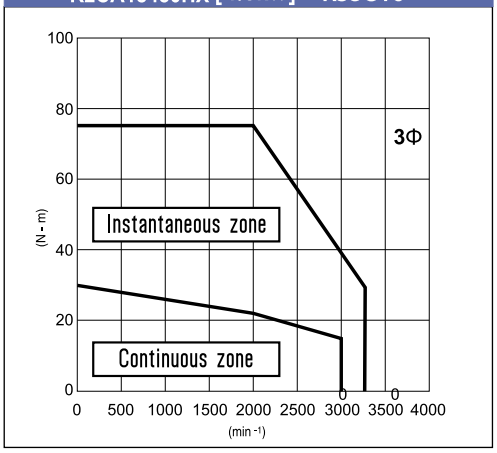

WITHOUT BRAKE

Indicated performances refer to motor controlled by related RS3 standard and EtherCat amplifiers.

3Φ = torque curve with three-phase power supply

WITH BRAKE

Suggested amplifiers: RS3C10A0AA2, RS3C10A2HA4

R2CA18750HCR00M

SANYO DENKI
SANMOTION

Dimensions (Unit:mm)

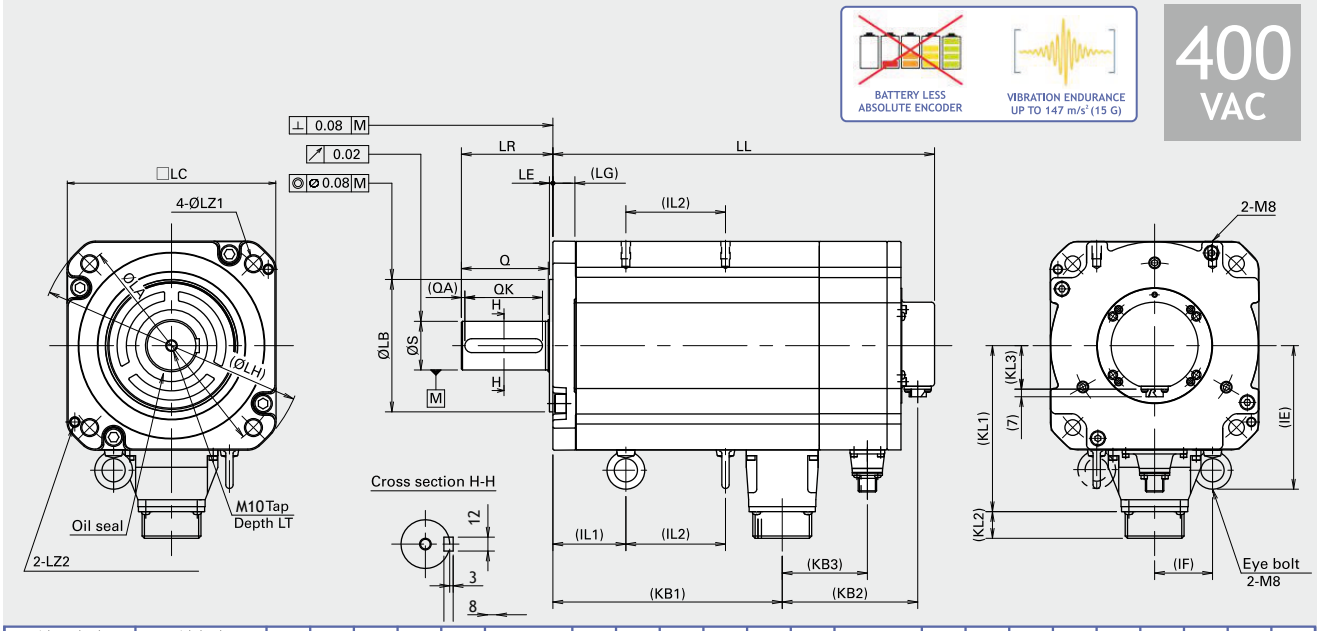

without brake LL	KB2	KB3	with brake LL	KB2	KB3	LG	KL1	KL2	KL3	LA	LB	LE	LH	LC	LZ1	LZ2	LR	S	Q	QA	QK	KB1	LT	IE	IF	IL1	IL2
--	--	--	329	117	74	19	144	22	38	200	0 114.3-0.0035	3	230	180	13.5	M8	79	0 42-0.016	75	3	67	198	25	123	50	63	86

FEATURES

MODEL		R2CA18750HCR00M
NOMINAL POWER	(W)	7500
NOMINAL SPEED	(rpm)	1500
MAXIMUM SPEED	(rpm)	3000
NOMINAL TORQUE	(Nm)	48
STALL TORQUE	(Nm)	54.9
MAXIMUM TORQUE	(Nm)	140
INERTIA	($Kg*m^2$)	98×10^{-4}
BATTERY-LESS ABSOLUTE ENCODER	(imp./rev)	SINGLE TURN: 131072 imp/rev (17 bit) MULTI TURN: 65536 turns (16 bit)
PROTECTION DEGREE		IP65
WEIGHT	(Kg)	38

TORQUE CURVE
R2CA18750HCR [7.5 KW] + RS3C15

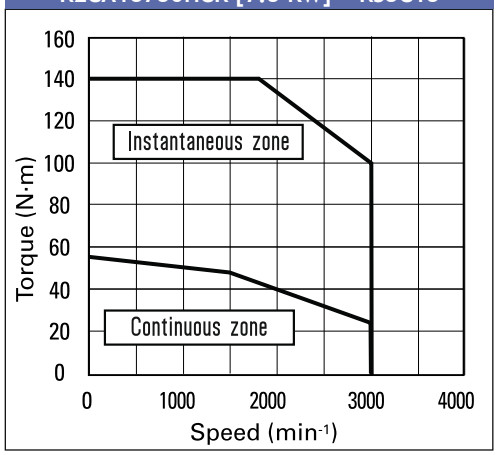

R2CA18750HCR00M

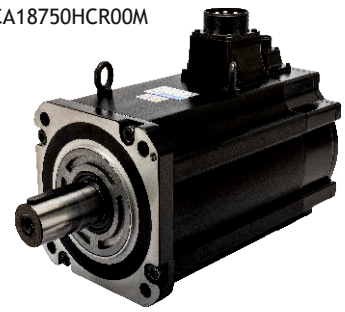

Indicated performances refer to motor controlled by related RS3 standard and EtherCat amplifiers.

3Φ = torque curve with three-phase power supply

Suggested amplifiers: RS3C15A2HL4

SERVO SYSTEMS

400 VAC SERVOMOTORS - INCREMENTAL ENCODER

For cable options please see the table at the end of the section.

R2CA18350LXH00M

SANYO DENKI
SANMOTION

Dimensions (Unit:mm)

400 VAC

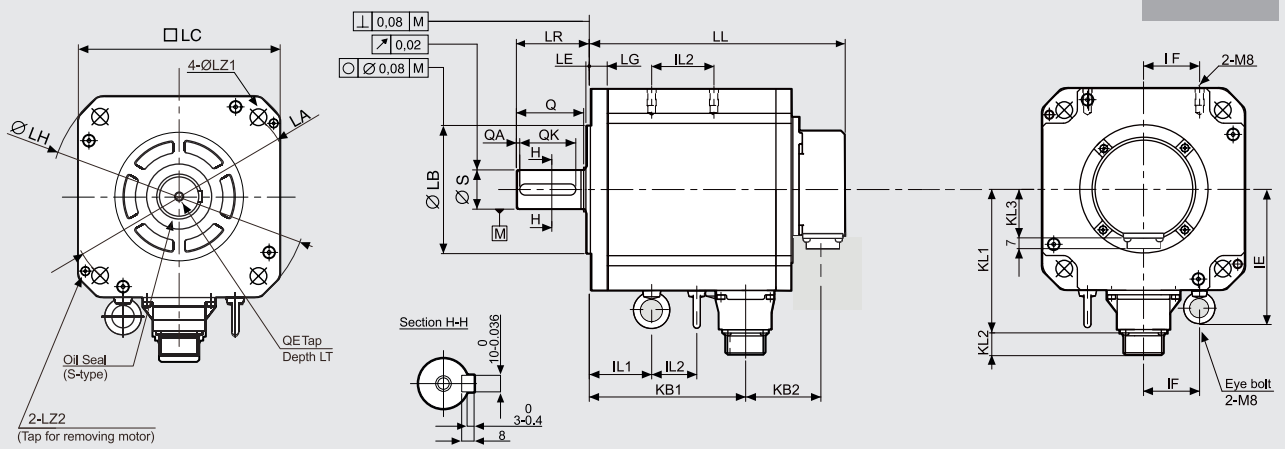

LL	KB2	KL1	KL2	KL3	LG	LA	LB	LE	LH	LC	LZ1	LZ2	LR	S	Q	QA	QK	IL1	IL2	IF	IE	KB1	QE	LT
159	52	123	21	38	16	200	0 Ø114.3-0.035	3	Ø230	□180	Ø13.5	M8	65	0 Ø35-0.016	60	3	50	47	20	50	123	92	M8	25

FEATURES

MODEL		R2CA18350LXH00M
NOMINAL POWER	(W)	3500
NOMINAL SPEED	(rpm)	2000
MAXIMUM SPEED	(rpm)	3000
NOMINAL TORQUE	(Nm)	17.0
STALL TORQUE	(Nm)	22.0
MAXIMUM TORQUE	(Nm)	49.0
INERTIA	($Kg*m^2$)	40×10^{-4}
ENCODER	(imp./rev)	131072 (17BIT)
PROTECTION DEGREE		IP65
WEIGHT	(Kg)	15.5

TORQUE CURVE
R2CA18350LXH [3.5kW] + RS3C05

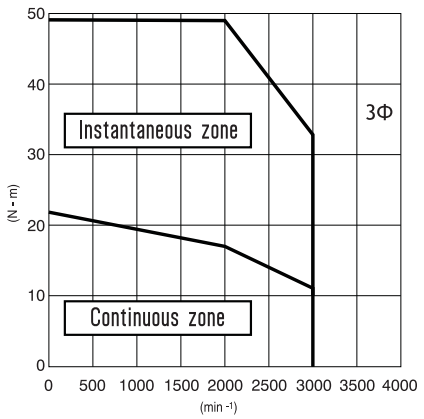

WITHOUT BRAKE

(Version with brake available on request)

Indicated performances refer to motor controlled by related RS3 standard and EtherCat amplifiers.

3Φ = torque curve with three-phase power supply

Suggested amplifiers: RS3C05A0AA2, RS3C05A2HA4

R2CA18450HXH00M

SANYO DENKI
SANMOTION

Dimensions (Unit:mm)

400 VAC

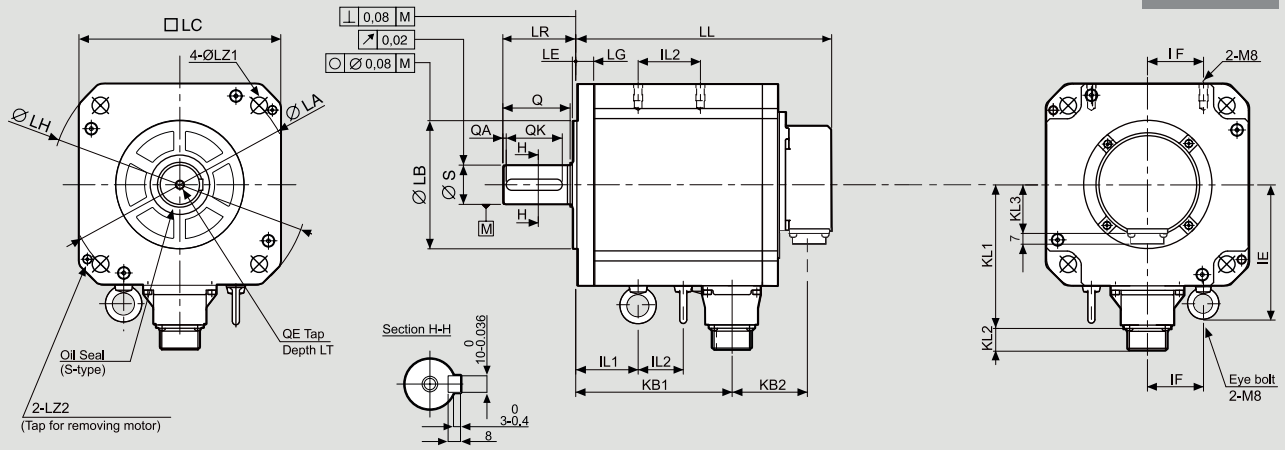

LL	KB2	KL1	KL2	KL3	LG	LA	LB	LE	LH	LC	LZ1	LZ2	LR	S	Q	QA	QK	IL1	IL2	IF	IE	KB1	QE	LT
176	52	123	21	38	16	200	0 Ø114.3-0.035	3	Ø230	□180	Ø13.5	M8	65±1	0 Ø35-0.016	60	3	50	57	20	50	123	109	M8	25

FEATURES

MODEL		R2CA18450HXH00M
NOMINAL POWER	(W)	4500
NOMINAL SPEED	(rpm)	2000
MAXIMUM SPEED	(rpm)	3500
NOMINAL TORQUE	(Nm)	21.5
STALL TORQUE	(Nm)	30
MAXIMUM TORQUE	(Nm)	75.0
INERTIA	($Kg*m^2$)	50×10^{-4}
ENCODER	(imp./rev)	131072 (17 BIT)
PROTECTION DEGREE		IP65
WEIGHT	(Kg)	20

TORQUE CURVE
R2CA18450HX [4.5kW] + RS3C10

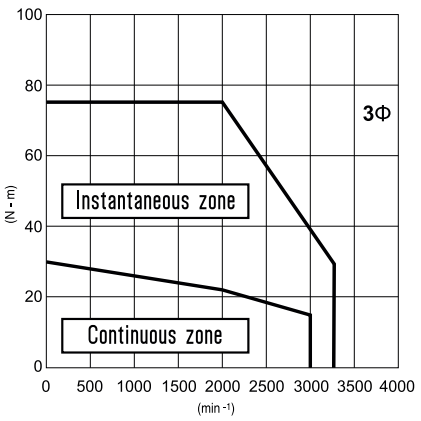

WITHOUT BRAKE

(Version with brake available on request)

Indicated performances refer to motor controlled by related RS3 standard and EtherCat amplifiers.

3Φ = torque curve with three-phase power supply

Suggested amplifiers: RS3C10A0AA2, RS3C10A2HA4

R2CA2215KVXH00M

SANYO DENKI
SANMOTION

Dimensions (Unit:mm)

400 VAC

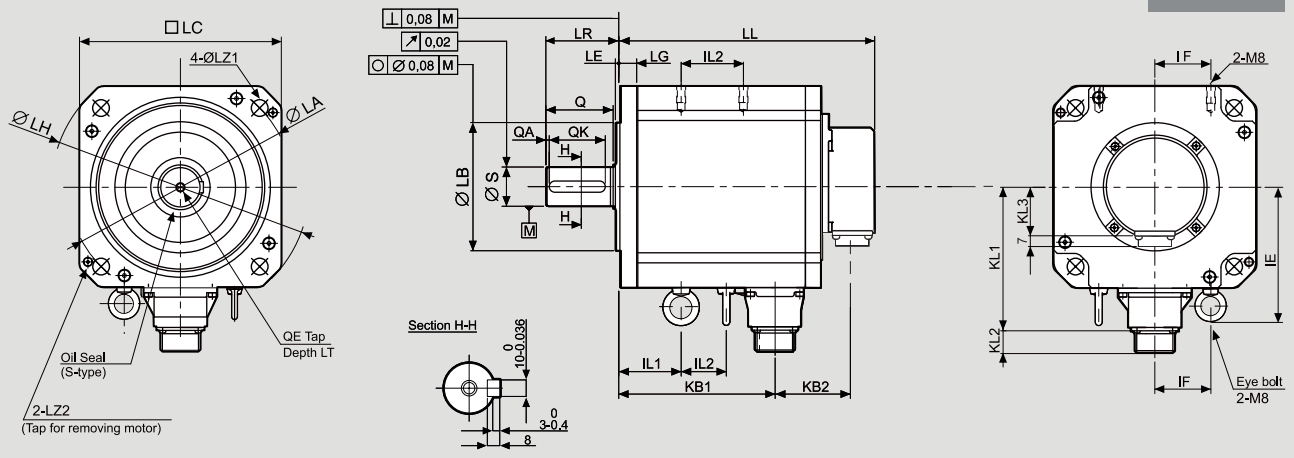

LL	KB2	KL1	KL2	KL3	LG	LA	LB	LE	LH	LC	LZ1	LZ2	LR	S	Q	QA	QK	IL1	IL2	IF	IE	KB1	QE	LT
397	78	162	22	38	19	235	0 Ø200-0.046	4	Ø270	□220	Ø13.5	M10	79	0 Ø55-0.019	79	3	67	98	150	60	142	304	M10	25

FEATURES

MODEL		R2CA2215KVXH00M
NOMINAL POWER	(W)	15000
NOMINAL SPEED	(rpm)	1500
MAXIMUM SPEED	(rpm)	2500
NOMINAL TORQUE	(Nm)	95.0
STALL TORQUE	(Nm)	95.0
MAXIMUM TORQUE	(Nm)	215
INERTIA	(Kg*m²)	288×10^{-4}
ENCODER	(imp./rev)	131072 (17BIT)
PROTECTION DEGREE		IP67
WEIGHT	(Kg)	74

TORQUE CURVE

R2CA2215KVXH [15.0kW] + RS3C15

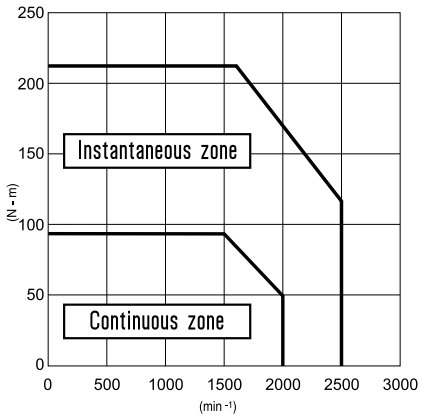

WITHOUT BRAKE

(Version with brake available on request)

Indicated performances refer to motor controlled by related RS3 standard amplifiers.

Suggested amplifiers: RS3C15A0AL2

CABLE OPTIONS EtherCAT SERVODRIVES

AC SERVOMOTORS	EtherCAT SERVODRIVES				
48 VDC Incremental encoder multi-axis	POWER SUPPLY CABLE	MOTOR CABLE	ENCODER CABLE	HOLDING BRAKE CABLE	DRIVE
R2GD04005FXH1CM	CVAB48ET402M	CVMB48ET4PMXXM	CVEB48ETPMXXM	NO BRAKE	RF2K24A0HL5
R2GD06010DXH11M	CVAB48ET402M	CVMB48ET4PMXXM	CVEB48ETPMXXM	NO BRAKE	
R2GD06020DXH11M	CVAB48ET402M	CVMB48ET4PMXXM	CVEB48ETPMXXM	NO BRAKE	
48 VDC Incremental Encoder single-axis	POWER SUPPLY CABLE	MOTOR CABLE	ENCODER CABLE	HOLDING BRAKE CABLE	DRIVE
R2GD04005FXH1CM	N/A	CVMB48ETPMXXM	CVEB48ETPMXXM	NO BRAKE	RS2K04A2HL5
R2GD06010DXH11M	N/A	CVMB48ETPMXXM	CVEB48ETPMXXM	NO BRAKE	
R2GD06020DXH11M	N/A	CVMB48ETPMXXM	CVEB48ETPMXXM	NO BRAKE	
230 VAC Battery Less Absolute Encoder	POWER SUPPLY CABLE	MOTOR CABLE	ENCODER CABLE	HOLDING BRAKE CABLE	DRIVE
R2AA04010FXR1CM	CVABRAXXM	CVMBRARXXM CVMBRARPMXXM	CVEBRARXXM CVEBRARPMXXM	NO BRAKE	RS3 A03A2HA4W00P
R2AA06020FXR11M	CVABRAXXM	CVMBRARXXM CVMBRARPMXXM	CVEBRARXXM CVEBRARPMXXM	NO BRAKE	
R2AA06040FXR11M	CVABRAXXM	CVMBRARXXM CVMBRARPMXXM	CVEBRARXXM CVEBRARPMXXM	NO BRAKE	
R2AA08075FXR11M	CVABRAXXM	CVMBRARXXM CVMBRARPMXXM	CVEBRARXXM CVEBRARPMXXM	NO BRAKE	
R2AAB8100HXR29M	CVABRAXXM	CVMBRARXXM CVMBRARPMXXM	CVEBRARXXM CVEBRARPMXXM	NO BRAKE	
Q2AA10150BXR48M	N/A	CVMBAR90QHXXM CVMBAR90QHPMXXM	CVEBAR90QHXXM CVEBAR90QHPMXXM	NO BRAKE	
230 VAC Battery Less Multi-turn Absolute Encoder (brake version)	POWER SUPPLY CABLE	MOTOR CABLE	ENCODER CABLE	HOLDING BRAKE CABLE	DRIVE
R2AA04010FCR1CM6	CVABRAXXM	CVMBRARXXM CVMBRARPMXXM	CVEBRARXXM CVEBRARPMXXM	CVFRPMXXM	RS3 A03A2HA4W00P
R2AA06020FCR11M	CVABRAXXM	CVMBRARXXM CVMBRARPMXXM	CVEBRARXXM CVEBRARPMXXM	CVFRPMXXM	
R2AA06040FCR11M	CVABRAXXM	CVMBRARXXM CVMBRARPMXXM	CVEBRARXXM CVEBRARPMXXM	CVFRPMXXM	
R2AA08075FCR11M	CVABRAXXM	CVMBRARXXM CVMBRARPMXXM	CVEBRARXXM CVEBRARPMXXM	CVFRPMXXM	
R2AAB8100HCR29M	CVABRAXXM	CVMBRARXXM CVMBRARPMXXM	CVEBRARXXM CVEBRARPMXXM	CVFRPMXXM	
Q2AA10150BCR48M	N/A	CVMBAR90QHXXM CVMBAR90QHPMXXM	CVEBAR90QHXXM CVEBAR90QHPMXXM	CVFPMXXM	
230 VAC Incremental Encoder	POWER SUPPLY CABLE	MOTOR CABLE	ENCODER CABLE	HOLDING BRAKE CABLE	DRIVE
R2AA04010FXH1CM	CVABRAXXM	CVMBRARXXM CVMBRARPMXXM	CVEBRARXXM CVEBRARPMXXM	NO BRAKE	RS3 A03A2HA4W00P
R2AA04010FCH1CM6	CVABRAXXM	CVMBRARXXM CVMBRARPMXXM	CVEBRARXXM CVEBRARPMXXM	CVFRPMXXM	
R2AA06020FXH11M	CVABRAXXM	CVMBRARXXM CVMBRARPMXXM	CVEBRARXXM CVEBRARPMXXM	NO BRAKE	
R2AA06020FCH11M	CVABRAXXM	CVMBRARXXM CVMBRARPMXXM	CVEBRARXXM CVEBRARPMXXM	CVFRPMXXM	
R2AA06040FXH11M	CVABRAXXM	CVMBRARXXM CVMBRARPMXXM	CVEBRARXXM CVEBRARPMXXM	NO BRAKE	
R2AA06040FCH11M6	CVABRAXXM	CVMBRARXXM CVMBRARPMXXM	CVEBRARXXM CVEBRARPMXXM	CVFRPMXXM	
R2AA08075FXH11M	CVABRAXXM	CVMBRARXXM CVMBRARPMXXM	CVEBRARXXM CVEBRARPMXXM	NO BRAKE	

CABLE OPTIONS EtherCAT SERVODRIVES

AC SERVOMOTORS	EtherCAT SERVODRIVES				
230 VAC Incremental Encoder	POWER SUPPLY CABLE	MOTOR CABLE	ENCODER CABLE	HOLDING BRAKE CABLE	DRIVE
R2AA08075FCH11M	CVABRAXXM	CVMBRARXXM CVMBRARPMXXM	CVEBRARXXM CVEBRARPMXXM	CVFRPMXXM	RS3 A03A2HA4W00P
R2AAB8100HXH29M	CVABRAXXM	CVMBRARXXM CVMBRARPMXXM	CVEBRARXXM CVEBRARPMXXM	NO BRAKE	
R2AAB8100HCH29M	CVABRAXXM	CVMBRARXXM CVMBRARPMXXM	CVEBRARXXM CVEBRARPMXXM	CVFRPMXXM	
Q2AA10150BXH48M	N/A	CVMBAR90QHXXM CVMBAR90QHPMXXM	CVEBAR90QHXXM CVEBAR90QHPMXXM	NO BRAKE	
Q2AA10150BCH48M	N/A	CVMBAR90QHXXM CVMBAR90QHPMXXM	CVEBAR90QHXXM CVEBAR90QHPMXXM	CVFPMXXM	
R1AA10150FXH00M	N/A	CVMBR1AR90XXM CVMBR1ARPM90XXM	CVEBAR1R2XXM CVEBAR1R2PMXXM	NO BRAKE	RS3 A05A2HA4W00P
R1AA10150FCH00M	N/A	CVMFR1ARPM90XXM	CVEBAR1R2XXM CVEBAR1R2PMXXM	MOTOR CABLE	
R2AA13180HXH00M	N/A	CVMBR2AR90XXM CVMBR2ARPM90XXM	CVEBAR1R2XXM CVEBAR1R2PMXXM	NO BRAKE	
R2AA13180HCH00M	N/A	CVMFR2ARPM90XXM	CVEBAR1R2XXM CVEBAR1R2PMXXM	MOTOR CABLE	
R2AA13200LXHW0M	N/A	CVMBR2AR90XXM CVMBR2ARPM90XXM	CVEBAR1R2XXM CVEBAR1R2PMXXM	NO BRAKE	
R2AA13200LCHW0M	N/A	CVMFR2ARPM90XXM	CVEBAR1R2XXM CVEBAR1R2PMXXM	MOTOR CABLE	
R1AA13300FXH00M	N/A	CVMB3KR1AR90XXM	CVEBAR1R2XXM CVEBAR1R2PMXXM	NO BRAKE	RS3 A10A2HA4W00P
R1AA13300FCH00M	N/A	CONNECTOR ONLY	CVEBAR1R2XXM CVEBAR1R2PMXXM	MOTOR CABLE	
400 VAC Incremental Encoder	POWER SUPPLY CABLE	MOTOR CABLE	ENCODER CABLE	HOLDING BRAKE CABLE	DRIVE
R2CA18350LXH00M	N/A	CONNECTOR ONLY (cable section: 3x2,5mm^2)	CVEBAR1R2XXM CVEBAR1R2PMXXM	NO BRAKE	RS3C05A2HA4
R2CA18450HXH00M	N/A	CONNECTOR ONLY (cable section: 3x4mm^2)	CVEBAR1R2XXM CVEBAR1R2PMXXM	NO BRAKE	RS3C10A2HA4
R2CA2215KVXH00M	N/A	CONNECTOR ONLY (cable section: 3x8mm^2)	CVEBAR1R2XXM CVEBAR1R2PMXXM	NO BRAKE	RS3C15A2HL4

CABLE OPTIONS EtherCAT SERVODRIVES

AC SERVOMOTORS	EtherCAT SERVODRIVES		
48 VDC Incremental encoder multi-axis	STO CABLE	I/O CONNECTOR	DRIVE
R2GD04005FXH1CM	CVSIORAD02M	KCIO48ET	RF2K24A0HL5
R2GD06010DXH11M	CVSIORAD02M	KCIO48ET	
R2GD06020DXH11M	CVSIORAD02M	KCIO48ET	
48 VDC Incremental encoder single-axis	STO CABLE	I/O CONNECTOR	DRIVE
R2GD04005FXH1CM	CVSIORAD02M	CVIOB48ET02M	RS2K04A2HL5
R2GD06010DXH11M	CVSIORAD02M	CVIOB48ET02M	
R2GD06020DXH11M	CVSIORAD02M	CVIOB48ET02M	
230 VAC Battery Less Multi-turn Absolute Encoder	STO CABLE	I/O CONNECTOR	DRIVE
R2AA04010FXR1CM	CVSIORAD02M	CVIORS3ET02M	RS3A03A2HA4W00P
R2AA06020FXR11M	CVSIORAD02M	CVIORS3ET02M	
R2AA06040FXR11M	CVSIORAD02M	CVIORS3ET02M	
R2AA08075FXR11M	CVSIORAD02M	CVIORS3ET02M	
R2AAB8100HXR29M	CVSIORAD02M	CVIORS3ET02M	
Q2AA10150BXR48M	CVSIORAD02M	CVIORS3ET02M	
230 VAC Battery Less Multi-turn Absolute Encoder (brake version)	STO CABLE	I/O CONNECTOR	DRIVE
R2AA04010FCR1CM6	CVSIORAD02M	CVIORS3ET02M	RS3A03A2HA4W00P
R2AA06020FCR11M	CVSIORAD02M	CVIORS3ET02M	
R2AA06040FCR11M	CVSIORAD02M	CVIORS3ET02M	
R2AA08075FCR11M	CVSIORAD02M	CVIORS3ET02M	
R2AAB8100HCR29M	CVSIORAD02M	CVIORS3ET02M	
Q2AA10150BCR48M	CVSIORAD02M	CVIORS3ET02M	
230 VAC Incremental Encoder	STO CABLE	I/O CONNECTOR	DRIVE
R2AA04010FXH1CM	CVSIORAD02M	CVIORS3ET02M	RS3A03A2HA4W00P
R2AA04010FCH1CM6	CVSIORAD02M	CVIORS3ET02M	
R2AA06020FXH11M	CVSIORAD02M	CVIORS3ET02M	
R2AA06020FCH11M	CVSIORAD02M	CVIORS3ET02M	
R2AA06040FXH11M	CVSIORAD02M	CVIORS3ET02M	
R2AA06040FCH11M6	CVSIORAD02M	CVIORS3ET02M	
R2AA08075FXH11M	CVSIORAD02M	CVIORS3ET02M	
R2AA08075FCH11M	CVSIORAD02M	CVIORS3ET02M	
R2AAB8100HXH29M	CVSIORAD02M	CVIORS3ET02M	
R2AAB8100HCH29M	CVSIORAD02M	CVIORS3ET02M	
Q2AA10150BXH48M	CVSIORAD02M	CVIORS3ET02M	
Q2AA10150BCH48M	CVSIORAD02M	CVIORS3ET02M	
R1AA10150FXH00M	CVSIORAD02M	CVIORS3ET02M	RS3A05A2HA4W00P
R1AA10150FCH00M	CVSIORAD02M	CVIORS3ET02M	
R2AA13180HXH00M	CVSIORAD02M	CVIORS3ET02M	
R2AA13180HCH00M	CVSIORAD02M	CVIORS3ET02M	
R2AA13200LXHW0M	CVSIORAD02M	CVIORS3ET02M	
R2AA13200LCHW0M	CVSIORAD02M	CVIORS3ET02M	

CABLE OPTIONS EtherCAT SERVODRIVES

AC SERVOMOTORS	EtherCAT SERVODRIVES		
230 VAC Incremental Encoder	STO CABLE	I/O CONNECTOR	DRIVE
R1AA13300FXH00M	CVSIORAD02M	CVIORS3ET02M	RS3A10A2HA4W00P
R1AA13300FCH00M	CVSIORAD02M	CVIORS3ET02M	
400 VAC Incremental Encoder	STO CABLE	I/O CONNECTOR	DRIVE
R2CA18350LXH00M	CVSIORAD02M	CVIORSRET02M	RS3C05A2HA4
R2CA18450HXH00M	CVSIORAD02M	CVIORS3ET02M	RS3C10A2HA4
R2CA2215KVXH00M	CVSIORAD02M	CVIORS3ET02M	RS3C15A2HL4

CABLE OPTIONS PULSE-TRAIN/ANALOG SERVODRIVES

AC SERVOMOTORS	PULSE-TRAIN/ANALOG SERVODRIVES				
48 VDC Incremental encoder	POWER SUPPLY CABLE	MOTOR CABLE	ENCODER CABLE	HOLDING BRAKE CABLE	DRIVE
R2GD04005FXH1CM	CVAB4802M	CVMB48PMXXM	CVEB48PMXXM	NO BRAKE	RF2G21A0A00
R2GD06010DXH11M	CVAB4802M	CVMB48PMXXM	CVEB48PMXXM	NO BRAKE	
R2GD06020DXH11M	CVAB4802M	CVMB48PMXXM	CVEB48PMXXM	NO BRAKE	
230 VAC Battery Less Multi-turn Absolute Encoder	POWER SUPPLY CABLE	MOTOR CABLE	ENCODER CABLE	HOLDING BRAKE CABLE	DRIVE
R2AA04010FXR1CM	CVABRAXXM	CVMBRARXXM CVMBRARPMXXM	CVEBRARXXM CVEBRARPMXXM	NO BRAKE	RS3A03A0AL0W00P RS3A03A0AL2
R2AA06020FXR11M	CVABRAXXM	CVMBRARXXM CVMBRARPMXXM	CVEBRARXXM CVEBRARPMXXM	NO BRAKE	
R2AA06040FXR11M	CVABRAXXM	CVMBRARXXM CVMBRARPMXXM	CVEBRARXXM CVEBRARPMXXM	NO BRAKE	
R2AA08075FXR11M	CVABRAXXM	CVMBRARXXM CVMBRARPMXXM	CVEBRARXXM CVEBRARPMXXM	NO BRAKE	
R2AAB8100HXR29M	CVABRAXXM	CVMBRARXXM CVMBRARPMXXM	CVEBRARXXM CVEBRARPMXXM	NO BRAKE	
Q2AA10150BXR48M	N/A	CVMBAR90QHXXM CVMBAR90QHPMXXM	CVEBAR90QHXXM CVEBAR90QHPMXXM	NO BRAKE	
230 VAC Battery Less Multi-turn Absolute Encoder (brake version)	POWER SUPPLY CABLE	MOTOR CABLE	ENCODER CABLE	HOLDING BRAKE CABLE	DRIVE
R2AA04010FCR1CM6	CVABRAXXM	CVMBRARXXM CVMBRARPMXXM	CVEBRARXXM CVEBRARPMXXM	CVFRPMXXM	RS3A03A0AL0W00P RS3A03A0AL2
R2AA06020FCR11M	CVABRAXXM	CVMBRARXXM CVMBRARPMXXM	CVEBRARXXM CVEBRARPMXXM	CVFRPMXXM	
R2AA06040FCR11M6	CVABRAXXM	CVMBRARXXM CVMBRARPMXXM	CVEBRARXXM CVEBRARPMXXM	CVFRPMXXM	
R2AA08075FCR11M	CVABRAXXM	CVMBRARXXM CVMBRARPMXXM	CVEBRARXXM CVEBRARPMXXM	CVFRPMXXM	
R2AAB8100HCR29M	CVABRAXXM	CVMBRARXXM CVMBRARPMXXM	CVEBRARXXM CVEBRARPMXXM	CVFRPMXXM	
Q2AA10150BCR48M	N/A	CVMBAR90QHXXM CVMBAR90QHPMXXM	CVEBAR90QHXXM CVEBAR90QHPMXXM	CVFPMXXM	
230 VAC Incremental Encoder	POWER SUPPLY CABLE	MOTOR CABLE	ENCODER CABLE	HOLDING BRAKE CABLE	DRIVE
R2AA04010FXH1CM	CVABRAXXM	CVMBRARXXM CVMBRARPMXXM	CVEBRARXXM CVEBRARPMXXM	NO BRAKE	RS3A03A0AL0W00P RS3A03A0AL2
R2AA04010FCH1CM6	CVABRAXXM	CVMBRARXXM CVMBRARPMXXM	CVEBRARXXM CVEBRARPMXXM	CVFRPMXXM	
R2AA06020FXH11M	CVABRAXXM	CVMBRARXXM CVMBRARPMXXM	CVEBRARXXM CVEBRARPMXXM	NO BRAKE	
R2AA06020FCH11M	CVABRAXXM	CVMBRARXXM CVMBRARPMXXM	CVEBRARXXM CVEBRARPMXXM	CVFRPMXXM	
R2AA06040FXH11M	CVABRAXXM	CVMBRARXXM CVMBRARPMXXM	CVEBRARXXM CVEBRARPMXXM	NO BRAKE	
R2AA06040FCH11M6	CVABRAXXM	CVMBRARXXM CVMBRARPMXXM	CVEBRARXXM CVEBRARPMXXM	CVFRPMXXM	
R2AA08075FXH11M	CVABRAXXM	CVMBRARXXM CVMBRARPMXXM	CVEBRARXXM CVEBRARPMXXM	NO BRAKE	
R2AA08075FCH11M	CVABRAXXM	CVMBRARXXM CVMBRARPMXXM	CVEBRARXXM CVEBRARPMXXM	CVFRPMXXM	
R2AAB8100HXH29M	CVABRAXXM	CVMBRARXXM CVMBRARPMXXM	CVEBRARXXM CVEBRARPMXXM	NO BRAKE	
R2AAB8100HCH29M	CVABRAXXM	CVMBRARXXM CVMBRARPMXXM	CVEBRARXXM CVEBRARPMXXM	CVFRPMXXM	

CABLE OPTIONS PULSE-TRAIN/ANALOG SERVODRIVES

AC SERVOMOTORS	PULSE-TRAIN/ANALOG SERVODRIVES				
230 VAC Incremental Encoder	POWER SUPPLY CABLE	MOTOR CABLE	ENCODER CABLE	HOLDING BRAKE CABLE	DRIVE
Q2AA10150BXH48M	N/A	CVMBAR90QHXXM CVMBAR90QHPMXXM	CVEBAR90QHXXM CVEBAR90QHPMXXM	NO BRAKE	RS3A03A0AL0W00P RS3A03A0AL2
Q2AA10150BCH48M	N/A	CVMBAR90QHXXM CVMBAR90QHPMXXM	CVEBAR90QHXXM CVEBAR90QHPMXXM	CVFPMXXM	
R1AA10150FXH00M	N/A	CVMBR1AR90XXM CVMBR1ARPM90XXM	CVEBAR1R2XXM CVEBAR1R2PMXXM	NO BRAKE	RS3A05A0AA2W00P
R1AA10150FCH00M	N/A	CVMFR1ARPM90XXM	CVEBAR1R2XXM CVEBAR1R2PMXXM	MOTOR CABLE	
R2AA13180HXH00M	N/A	CVMBR2AR90XXM CVMBR2ARPM90XXM	CVEBAR1R2XXM CVEBAR1R2PMXXM	NO BRAKE	
R2AA13180HCH00M	N/A	CVMFR2ARPM90XXM	CVEBAR1R2XXM CVEBAR1R2PMXXM	MOTOR CABLE	
R2AA13200LXHW0M	N/A	CVMBR2AR90XXM CVMBR2ARPM90XXM	CVEBAR1R2XXM CVEBAR1R2PMXXM	NO BRAKE	
R2AA13200LCHW0M	N/A	CVMFR2ARPM90XXM	CVEBAR1R2XXM CVEBAR1R2PMXXM	MOTOR CABLE	
R1AA13300FXH00M	N/A	CVMB3KR1AR90XXM	CVEBAR1R2XXM CVEBAR1R2PMXXM	NO BRAKE	RS3A10A0AA2
R1AA13300FCH00M	N/A	CONNECTOR ONLY	CVEBAR1R2XXM CVEBAR1R2PMXXM	MOTOR CABLE	
400 VAC Incremental Encoder	POWER SUPPLY CABLE	MOTOR CABLE	ENCODER CABLE	HOLDING BRAKE CABLE	DRIVE
R2CA18350LXH00M	N/A	CONNECTOR ONLY (cable section: 3x2,5mm^2)	CVEBAR1R2XXM CVEBAR1R2PMXXM	NO BRAKE	RS3C05A0AA2
R2CA18450HXH00M	N/A	CONNECTOR ONLY (cable section: 3x4mm^2)	CVEBAR1R2XXM CVEBAR1R2PMXXM	NO BRAKE	RS3C10A0AA2
R2CA2215KVXH00M	N/A	CONNECTOR ONLY (cable section: 3x8mm^2)	CVEBAR1R2XXM CVEBAR1R2PMXXM	NO BRAKE	RS3C15A0AL2

CABLE OPTIONS PULSE-TRAIN/ANALOG SERVODRIVES

AC SERVOMOTORS	PULSE-TRAIN/ANALOG SERVODRIVES		
48 VDC Incremental encoder	STO CABLE	I/O CONNECTOR	DRIVE
R2GD04005FXH1CM	no SIL	CVSDB4802M-CVIOB4802M	RF2G21A0A00
R2GD06010DXH11M	no SIL	CVSDB4802M-CVIOB4802M	
R2GD06020DXH11M	no SIL	CVSDB4802M-CVIOB4802M	
230 VAC Battery Less Multi-turn Absolute Encoder	STO CABLE	I/O CONNECTOR	DRIVE
R2AA04010FXR1CM	CVSIORAD02M-BPS01	CVLBRR02M-KCQ02	RS3A03A0AL0W00P RS3A03A0AL2
R2AA06020FXR11M	CVSIORAD02M-BPS01	CVLBRR02M-KCQ02	
R2AA06040FXR11M	CVSIORAD02M-BPS01	CVLBRR02M-KCQ02	
R2AA08075FXR11M	CVSIORAD02M-BPS01	CVLBRR02M-KCQ02	
R2AAB8100HXR29M	CVSIORAD02M-BPS01	CVLBRR02M-KCQ02	
Q2AA10150BXR48M	CVSIORAD02M-BPS01	CVLBRR02M-KCQ02	
230 VAC Battery Less Multi-turn Absolute Encoder (brake version)	STO CABLE	I/O CONNECTOR	DRIVE
R2AA04010FCR1CM6	CVSIORAD02M-BPS01	CVLBRR02M-KCQ02	RS3A03A0AL0W00P RS3A03A0AL2
R2AA06020FCR11M	CVSIORAD02M-BPS01	CVLBRR02M-KCQ02	
R2AA06040FCR11M6	CVSIORAD02M-BPS01	CVLBRR02M-KCQ02	
R2AA08075FCR11M	CVSIORAD02M-BPS01	CVLBRR02M-KCQ02	
R2AAB8100HCR29M	CVSIORAD02M-BPS01	CVLBRR02M-KCQ02	
Q2AA10150BCR48M	CVSIORAD02M-BPS01	CVLBRR02M-KCQ02	
230 VAC Incremental Encoder	STO CABLE	I/O CONNECTOR	DRIVE
R2AA04010FXH1CM	CVSIORAD02M-BPS01	CVLBRR02M-KCQ02	RS3A03A0AL0W00P RS3A03A0AL2
R2AA04010FCH1CM6	CVSIORAD02M-BPS01	CVLBRR02M-KCQ02	
R2AA06020FXH11M	CVSIORAD02M-BPS01	CVLBRR02M-KCQ02	
R2AA06020FCH11M	CVSIORAD02M-BPS01	CVLBRR02M-KCQ02	
R2AA06040FXH11M	CVSIORAD02M-BPS01	CVLBRR02M-KCQ02	
R2AA06040FCH11M6	CVSIORAD02M-BPS01	CVLBRR02M-KCQ02	
R2AA08075FXH11M	CVSIORAD02M-BPS01	CVLBRR02M-KCQ02	
R2AA08075FCH11M	CVSIORAD02M-BPS01	CVLBRR02M-KCQ02	
R2AAB8100HXH29M	CVSIORAD02M-BPS01	CVLBRR02M-KCQ02	
R2AAB8100HCH29M	CVSIORAD02M-BPS01	CVLBRR02M-KCQ02	
Q2AA10150BXH48M	CVSIORAD02M-BPS01	CVLBRR02M-KCQ02	
Q2AA10150BCH48M	CVSIORAD02M-BPS01	CVLBRR02M-KCQ02	
R1AA10150FXH00M	CVSIORAD02M-BPS01	CVLBRR02M-KCQ02	RS3A05A0AA2W00P
R1AA10150FCH00M	CVSIORAD02M-BPS01	CVLBRR02M-KCQ02	

CABLE OPTIONS PULSE-TRAIN/ANALOG SERVODRIVES

AC SERVOMOTORS	PULSE-TRAIN/ANALOG SERVODRIVES		
230 VAC Incremental Encoder	STO CABLE	I/O CONNECTOR	DRIVE
R2AA13180HXH00M	CVSIORAD02M-BPS01	CVLBRR02M-KCQ02	RS3A05A0AA2W00P
R2AA13180HCH00M	CVSIORAD02M-BPS01	CVLBRR02M-KCQ02	
R2AA13200LXHW0M	CVSIORAD02M-BPS01	CVLBRR02M-KCQ02	
R2AA13200LCHW0M	CVSIORAD02M-BPS01	CVLBRR02M-KCQ02	
R1AA13300FXH00M	CVSIORAD02M-BPS01	CVLBRR02M-KCQ02	RS3A10A0AA2
R1AA13300FCH00M	CVSIORAD02M-BPS01	CVLBRR02M-KCQ02	
400 VAC Incremental Encoder	STO CABLE	I/O CONNECTOR	DRIVE
R2CA18350LXH00M	CVSIORAD02M-BPS01	CVLBRR02M-KCQ02	RS3C05A0AA2
R2CA18450HXH00M	CVSIORAD02M-BPS01	CVLBRR02M-KCQ02	RS3C10A0AA2
R2CA2215KVXH00M	CVSIORAD02M-BPS01	CVLBRR02M-KCQ02	RS3C15A0AL2

ITALY

Corporate Headquarters

R.T.A.srl
Via E. Mattei 15, Fraz. Divisa - 27020 Marcignago (PV) ITALY
T +39.0382.929.855 | F +39.0382.929.150 | info@rta.it

www.rta.it

Local Branches

R.T.A. Filiale Centro
Centro Direzionale Cavour
Via Cavour 2, 40055 Villanova di Castenaso (BO) ITALY
T +39.051.780141 | rtabo@rta.it

R.T.A. Filiale Nord-Est
Via D. Alighieri 4, 30034 Mira (VE) ITALY
T +39.041.5600332 | F +39.041.5600165 | rtane@rta.it

GERMANY

R.T.A. Deutschland GmbH
Bublitzer Strasse 34, 40599 Düsseldorf GERMANY
T +49.211.749.668.60 | F +49.211.749.668.66 | info@rta-deutschland.de

www.rta-deutschland.de

INDIA

R.T.A. India Pvt
Teerth Business Center
3rd Floor, Unit No. 7, Block EL - 15, MIDC Bhosari
Pimpri-Chinchwad, Pune 411026 INDIA
T +91 942.250.744.5 | rtain@rta-india.in

www.rta-india.in

CATALOGUE
DIGITAL EDITION

Look Ahead!

CG_EN_OCT25