SP 2563-5200

SANYO DENKI
SANMOTION

Dimensions (Unit:mm)

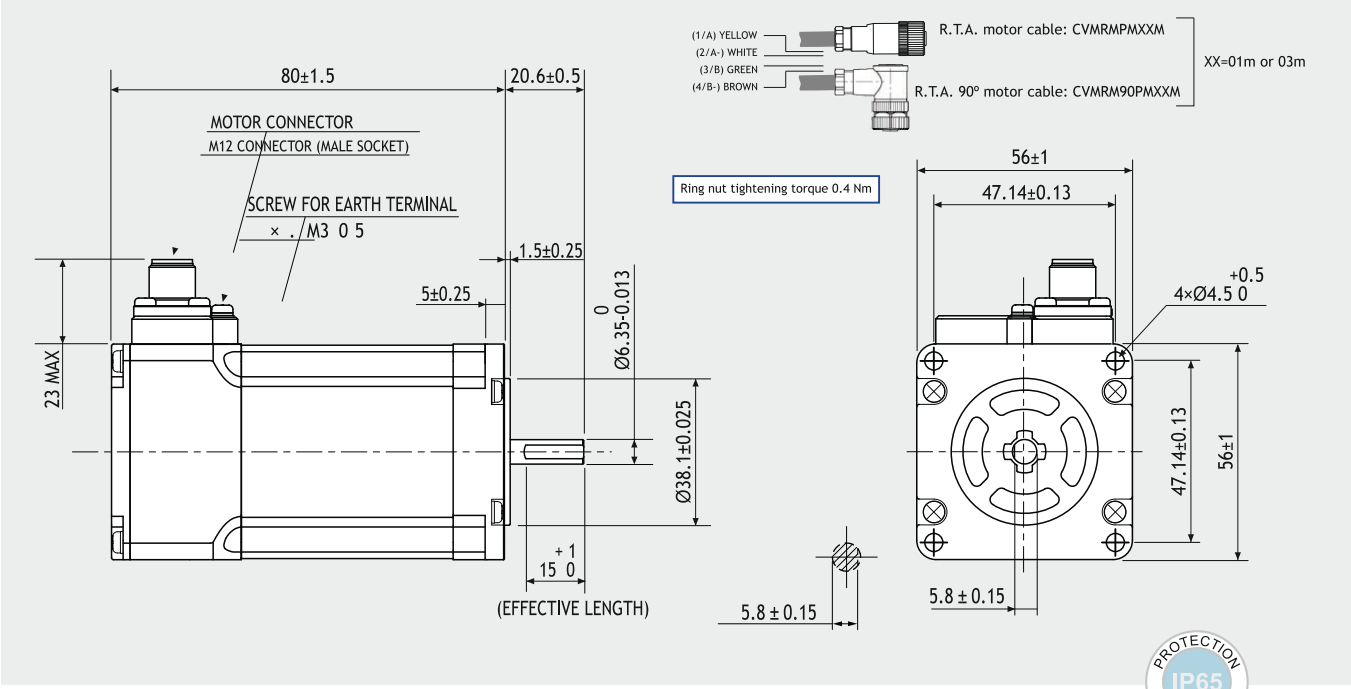

PROTECTION DEGREE IP65

FEATURES

MODEL		SP 2563-5200
BASIC STEP ANGLE		1.8 ± 0.09°
BIPOLAR CURRENT	(A)	3
RESISTANCE	(Ohm)	0.75
INDUCTANCE	(mH)	3.4
BIPOLAR HOLDING TORQUE	(Ncm)	100
ROTOR INERTIA	(Kgm ^{2} x 10 $^{-7}$)	210
THEORETICAL ACCELERATION	(rad x sec.$^{-2}$)	47600
BACK E.M.F.	(V/Krpm)	33
MASS	(Kg)	0.9
INTERNATIONAL STANDARDS		UL, CSA, CE, RoHS
INSULATION VOLTAGE	(V)	250 V_{AC} (350 V_{DC})
PROTECTION DEGREE - INSULATION CLASS		IP65 - F

TORQUE CURVE

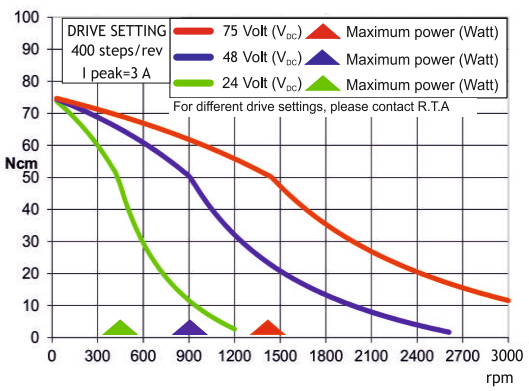

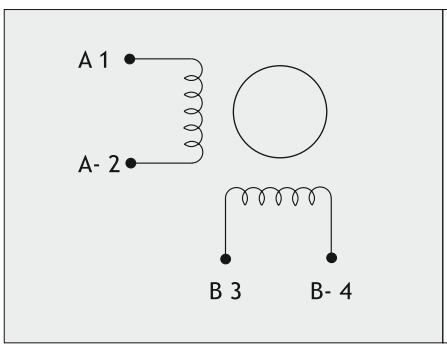

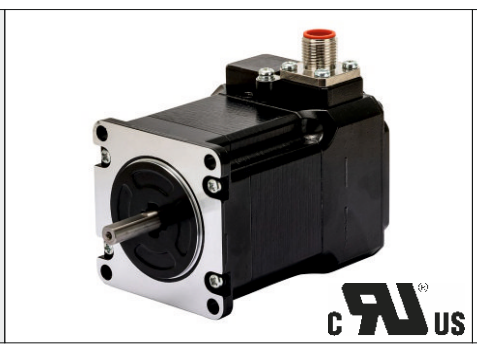

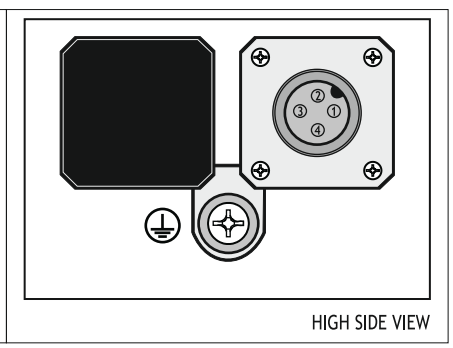

Suggested R.T.A. drive series: CSD, NDC, ADW, HGD, PLUS, FLEX-DRIVE

R.T.A. s.r.l.
Via E. Mattei - Fraz- Divisa
27020 Marcignago (PV) (Italy)
T +39.0382.929.855
F +39.0382.929.150
www.rta.it

R.T.A. Deutschland GmbH
Bublitzer Strasse 34, 40599
Duesseldorf (Germany)
T +49.211.749.668.60
F +49.211.749.668.66
www.rta-deutschland.de

R.T.A. IBERICA
C/Generalitat 22, Local 1
08850 Gava - Barcelona (Spain)
T +34 936.388.805
F +34 936.334.595
www.rta-iberica.es

R.T.A. INDIA Pvt
Teerth Business Center 3rd Floor, Unit No. 7,
Block EL-15, MIDC Bhosari Pimpi-Chinchwd,
Pune 411026 (India)
Tel. +91 9422507445
www.rta-india.in